voran® machinery

Belt Press EBP1200

English

Flavourful quality

Natural juices

Naturally unfiltered fruit and vegetable juices represent an important and tasty part of a healthy and balanced diet. They are a source of trace elements, minerals and natural vitamins in a balanced composition.

Hygiene

Compliance with hygiene standards for raw materials and system operation is one of the most important requirements for preserving the valuable ingredients during processing. For this reason, we at voran® place great value on the easy cleaning and the compatibility with foodstuffs of all of our parts coming into contact with products.

Efficiency

Our modern fruit processing systems are distinguished by outstanding product quality, high juice yields—with extremely low operating, servicing and maintenance expenditures—and a high intrinsic value.

Fruit processing lines

As a groundbreaking solution, every machine part is a perfectly coordinated modular fruit processing line for the production and marketing of natural, easily digestible and quality products with a long shelf life.

Experience meets innovation

For decades, voran® Holding has stood for quality, dynamics and professionalism in the food processing sector. As a financially stable mid-sized company, we currently employ around 160 workers in Pichl bei Wels — in the heart of Austria.

Well thought-out solution

Continuously high yield

The operation of this belt press is fully automatic and continuous, requiring only very limited monitoring effort. The stepless regulation of the pressing speed and force guarantees optimal juice quality and a yield of up to 75 %. It can be used universally for various types of fruit (stone fruits must be pitted before they are pressed), berries, vegetables, herbs and for the dehydration of various materials.

Special attention was paid to the easy accessibility of all system parts and their easy cleaning. All of the add-on parts such as dosing boxes, mash conveyor, juice discharge plate, juice trough, etc., can be removed without tools. This allows interim and final cleaning to be carried out efficiently. All of the system parts coming into contact with products are suitable for use with foods. The complete structure is made from stainless steel and thus meets the highest hygienic requirements for food processing. Low operating and maintenance costs distinguish this machine.

The machine is fully assembled and ready to plug in. It can be set up flush to the floor without a foundation. At your request, we will be happy to commission your belt press for you.

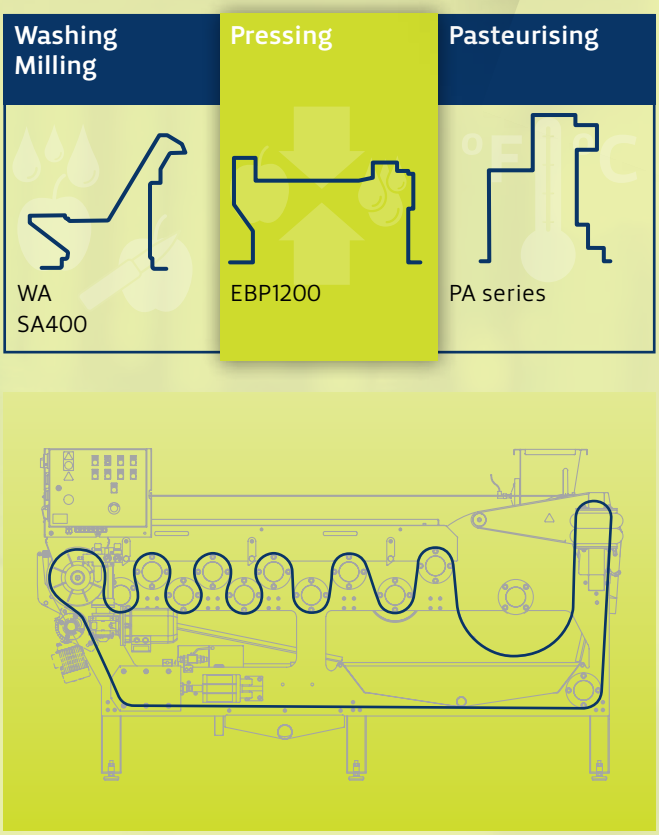

Design

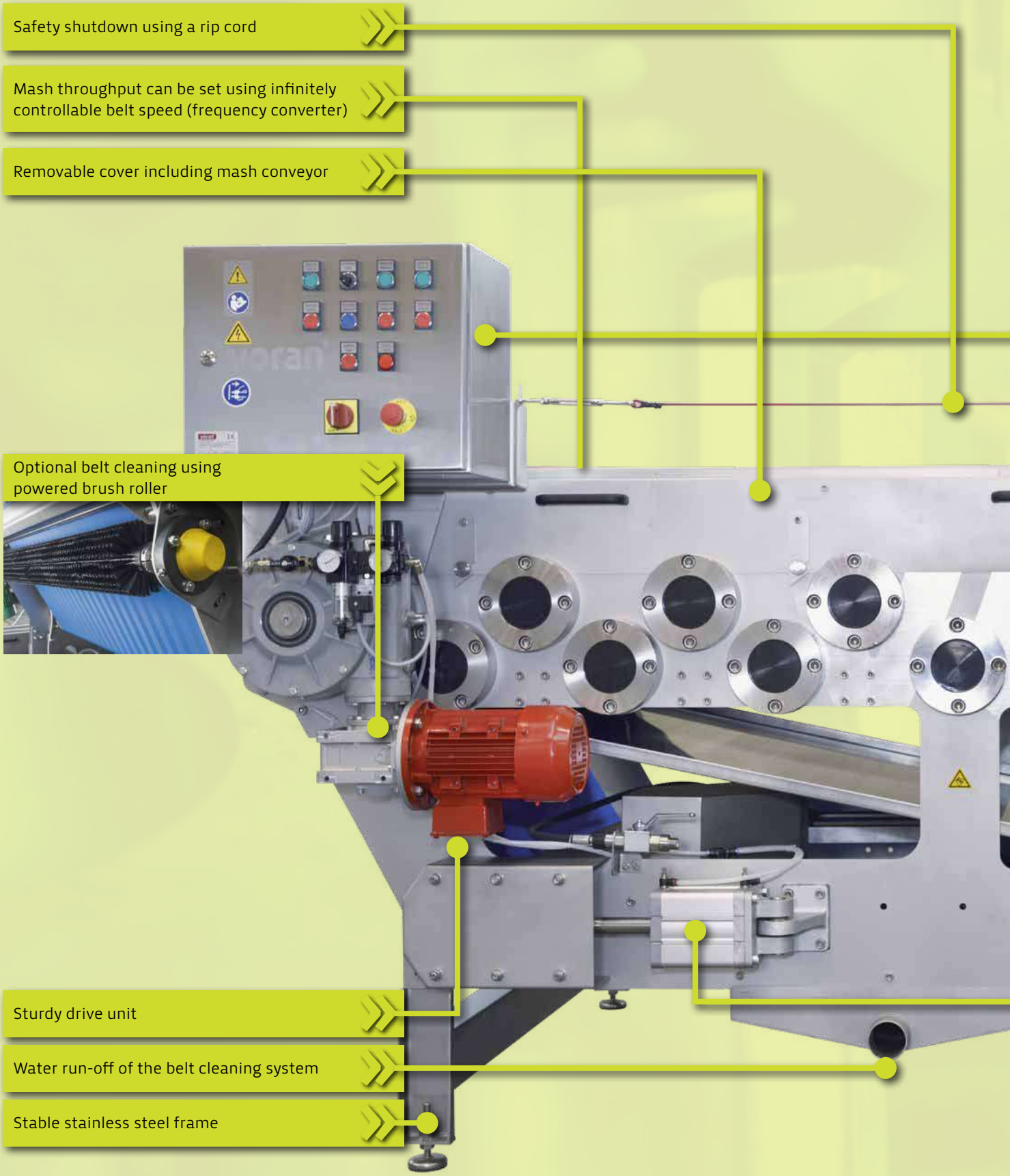
Safety shutdown using a rip cord
Mash throughput can be set using infinitely controllable belt speed (frequency converter)
Removable cover including mash conveyor
Optional belt cleaning using powered brush roller
Sturdy drive unit
Water run-off of the belt cleaning system
Stable stainless steel frame

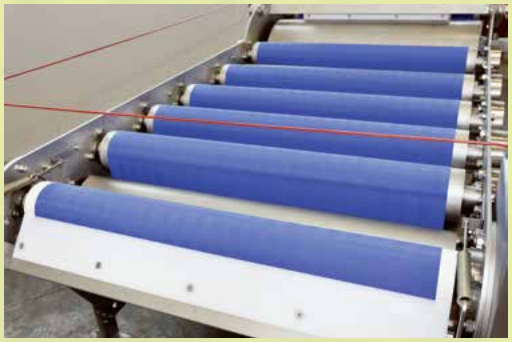

Belt run

Dosing can be adjusted to suit the product

Dosing box with integrated fill-level sensor

User-friendly central operation

Belt tension pneumatically and infinitely adjustable

Corrosion-resistant bearing housing

Juice outlet

Automatic regulation of the belt run

Adjustable, damped machine feet for optimal levelling

Supplements

WAR65

Stainless steel washing-grinding system for fruits, consisting of washing vessel, vertical auger-type elevator and add-on centrifugal mill. The washing system is switched on and off automatically by the press using an electrically controlled overfill guard to enable optimal filling of the belt press. The rotating tower can be rotated 360 degrees for easy cleaning and for different arrangement options within the overall system.

Inclined elevator SA400-RM75

With the SA400-RM75, we offer you a perfectly coordinated and powerful washing-and-grinding system combination. The combined washing system cleans uses underwater air-blasting for cleaning on the one hand, and on the other hand, a precipitator, which the water flows through. The underwater blasting of fresh air keeps the fruit in constant motion. The fruits are gently cleaned by rubbing against each other.

GKE

The GKE1000 is the optimal solution for the dosed emptying of large bins. The bin can be placed in the machine by a lift truck or a forklift. Pressing a button hydraulically tips it. The tipping process stops when the button is released and the bin remains in its current position until the button is pressed again. Pressing a button returns the empty bin to its initial position where it can be removed again. The device is manufactured from stainless steel and equipped with support feet.

See for further details in our GKE folder.

Included in the EBP1200 scope of supply:

We rely exclusively on brand-name quality for our accessories.

Compressors

High-pressure cleaner

Technical data

EBP1200

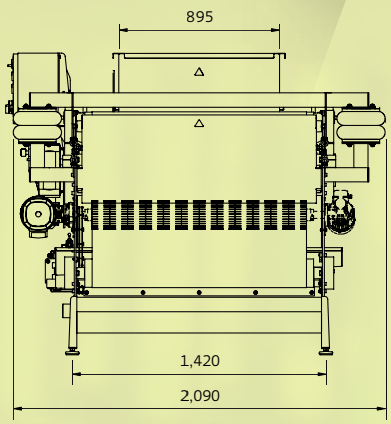

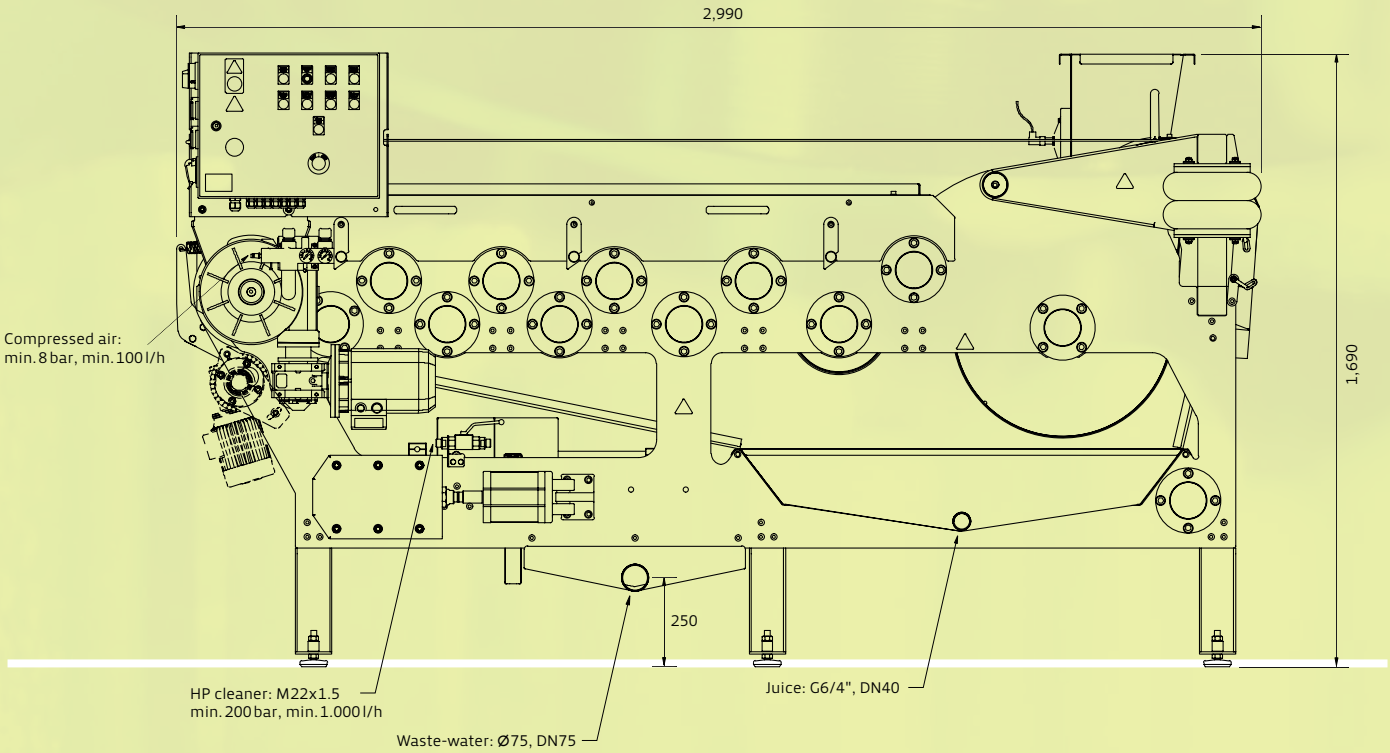

Model	EBP1200
Rated throughput in kg/h	3,000*
Cycle time in min	2–11
Drive motor power / belt-cleaning motor power in kW	2.2 / 0.37
*Electrical connection***	400 V/50 Hz (three-phase)
Minimum fuse protection in A	32
Plug	CEE 32 A
Water consumption for belt cleaning in l/min	max. 12
Compressed air consumption in l/min for at least 8 bar	100
Height of the mash intake in mm	1,690
Height of the discharge in mm	890
Length/width/height dimensions in mm	2,090/2,990/1,690
Design	Stainless steel***
Total weight in kg	2,500

*dependent on the processed raw material **Other mains voltages and designs on request ***Fulfils EC 1935/2004

Subject explicitly to technical changes and errors.

voran.at

voran business lines

- machines
- machine construction
- plant construction
- facades

How to find us

voran Maschinen GmbH

Sales
Linzer Strasse 30
A 4650 Edt bei Lambach
T +43 (0) 72 49 / 444-0
F +43 (0) 72 49 / 444-888
office@voran.at
www.voran.at

Production
Inn 7
A 4632 Pichl bei Wels

Service hotline
Monday - Friday, 7 a.m. – 8 p.m.
Saturday, 7 a.m. – 6 p.m.
T +43 (0) 72 49 / 444-200

Folder ID 600000571