voran® machinery

# Belt press EBP350

# Delicious quality

## Natural juices

Naturally cloudy fruit and vegetable juices represent an important and tasty element of healthy and balanced nutrition. They are a source of nutrients, minerals and natural vitamins in a balanced composition.

## Hygiene

The maintenance of hygiene for the raw materials and mechanical operations is one of the most important requirements so that the valuable ingredients are retained during processing. Therefore at voran® we focus on simple cleaning and the food-grade quality of all parts that touch the product.

## Profitability

Our modern fruit processing equipment is characterised by excellent product quality, high juice yield—at extremely low operating, maintenance and repair costs—and high value maintenance.

## Fruit processing lines

As an innovative solution each machine is part of a perfectly matched modular fruit processing line for producing and marketing natural, digestible, long-life, high-quality products.

## Experience meets innovation

For decades voran® has stood for quality, dynamism and professionalism when it comes to food processing. As a financially stable, medium-sized company, we currently employ around 160 people in Pichl bei Wels—in the heart of Upper Austria.

**voran®—our solutions for today are the standard for tomorrow.**

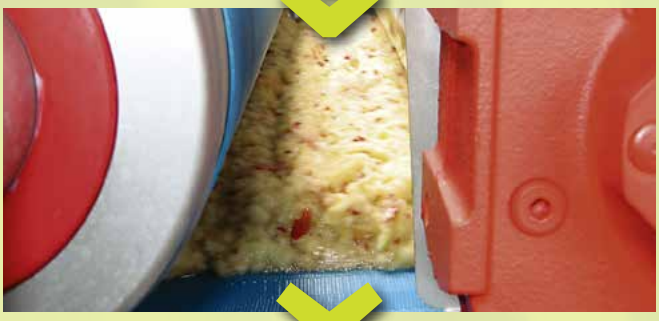

# Well thought-out solution

## Continuously high yield

The operation of this belt press is completely automatic and continuous so it only requires a low level of monitoring. The infinite regulation of the press speed and pressure guarantees ideal juice quality and up to 70% yield. It can be used universally for various types of fruit (stones must be removed before pressing), berries, vegetables, herbs and to dehydrate all kinds of ingredients.

During construction the special focus is on the easy accessibility of all of the machine's parts and their simple cleaning. All attachment parts such as dosing boxes, mash guidance, juice guidance sheet, juice container etc. can be removed without tools. This enables intermediate and final cleaning to be conducted efficiently. All machine parts that are in contact with the food are food-grade.

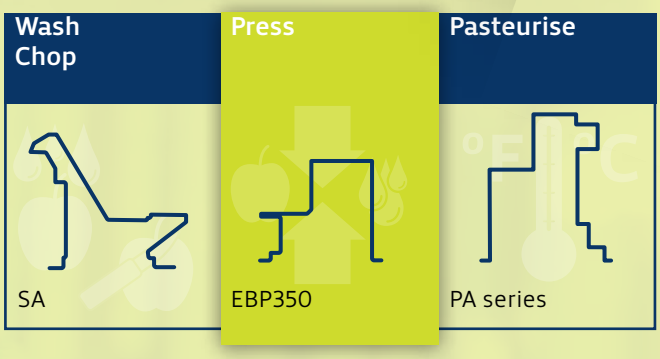


The whole design is made from stainless steel and therefore meets the highest hygiene requirements for food processing. Low costs for operation and maintenance characterise this machine.

The machine is ready to plug in and can be assembled on a flat surface without foundations. If requested we are happy to make the belt press operational for you.

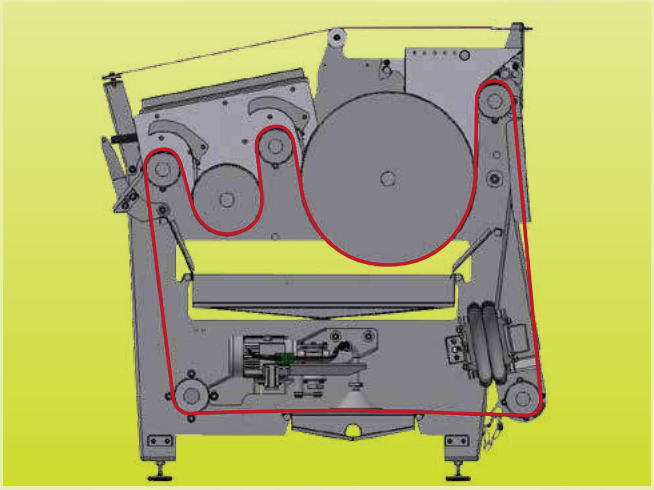

# Design

Safety switch using rip cord

Frequency converter for infinite adjustment of the belt speed

Easily removed cover including mesh guide

Robust drive unit

Stable stainless steel frame

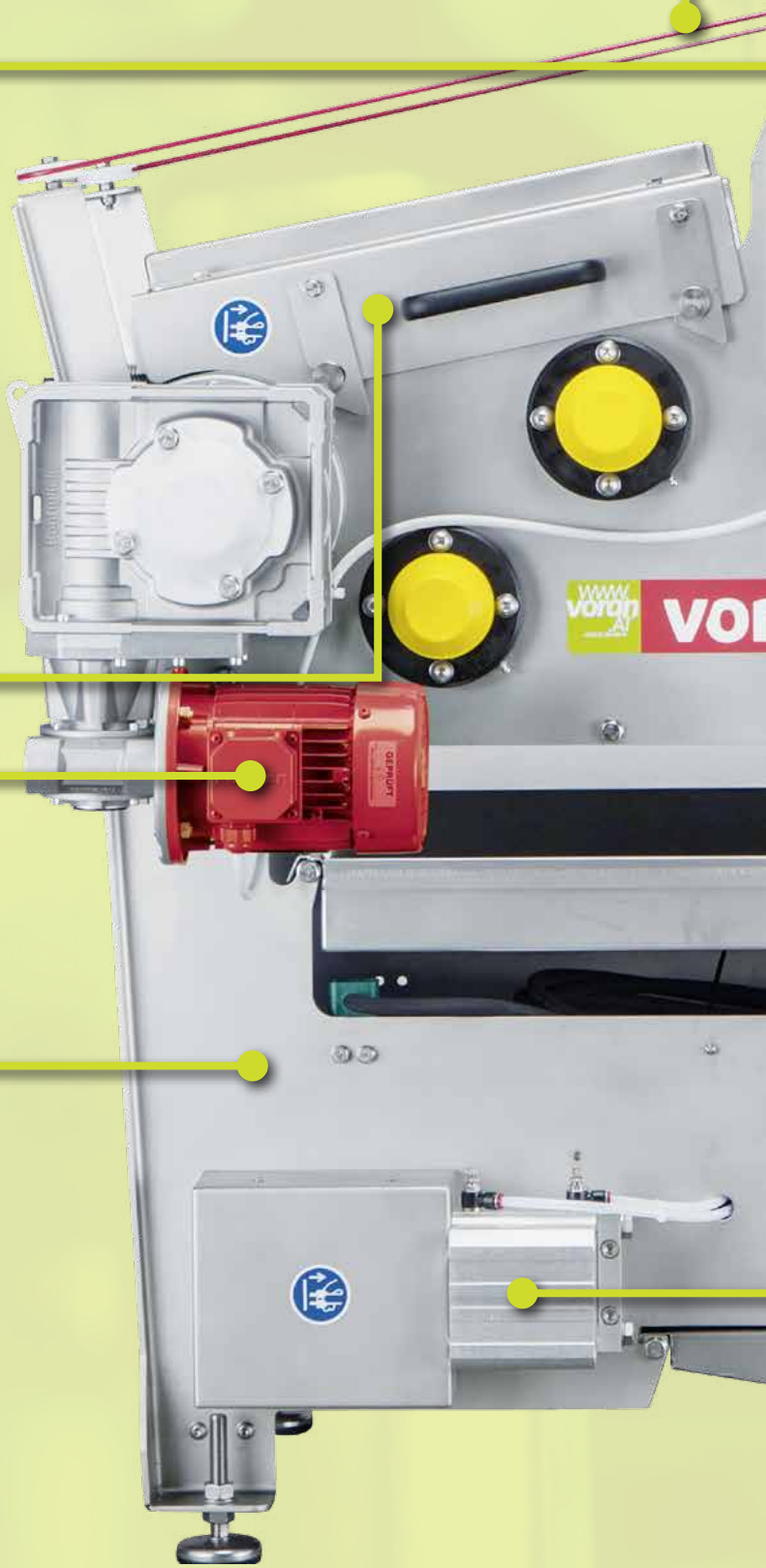

Removable dosing box (optionally with fill level sensor)

Simple control using drive and cleaning switcher

Corrosion-resistant storage casing

Pressure controller with pressure monitoring

Automatic belt tightening

Automatic regulation of the belt running

Adjustable, dampened machine bases for optimal levelling

# Additions

## Elevator with centrifugal mill SA + RM2.2

Washing system for fruit and vegetables made from stainless steel comprising sorting grid, wash container and transport chain. The transported items are washed in the container and using a fresh water jet on the transport belt. The transport speed is infinitely adjustable due to frequency converters. The elevator is suitable for processing the most varied of food such as fruit, berries or vegetables.

You can find detailed information on the elevator in the folder SA200/SA400.

## Juice collection tank 65 l

Food grade collection container with 1mm rough sieve. Secure and simple operation using a completely automatic impeller pump.

## Optional accessories

We rely on trusted branded quality for our accessories.

Compressors

High-pressure cleaners

# Technical data

## EBP350

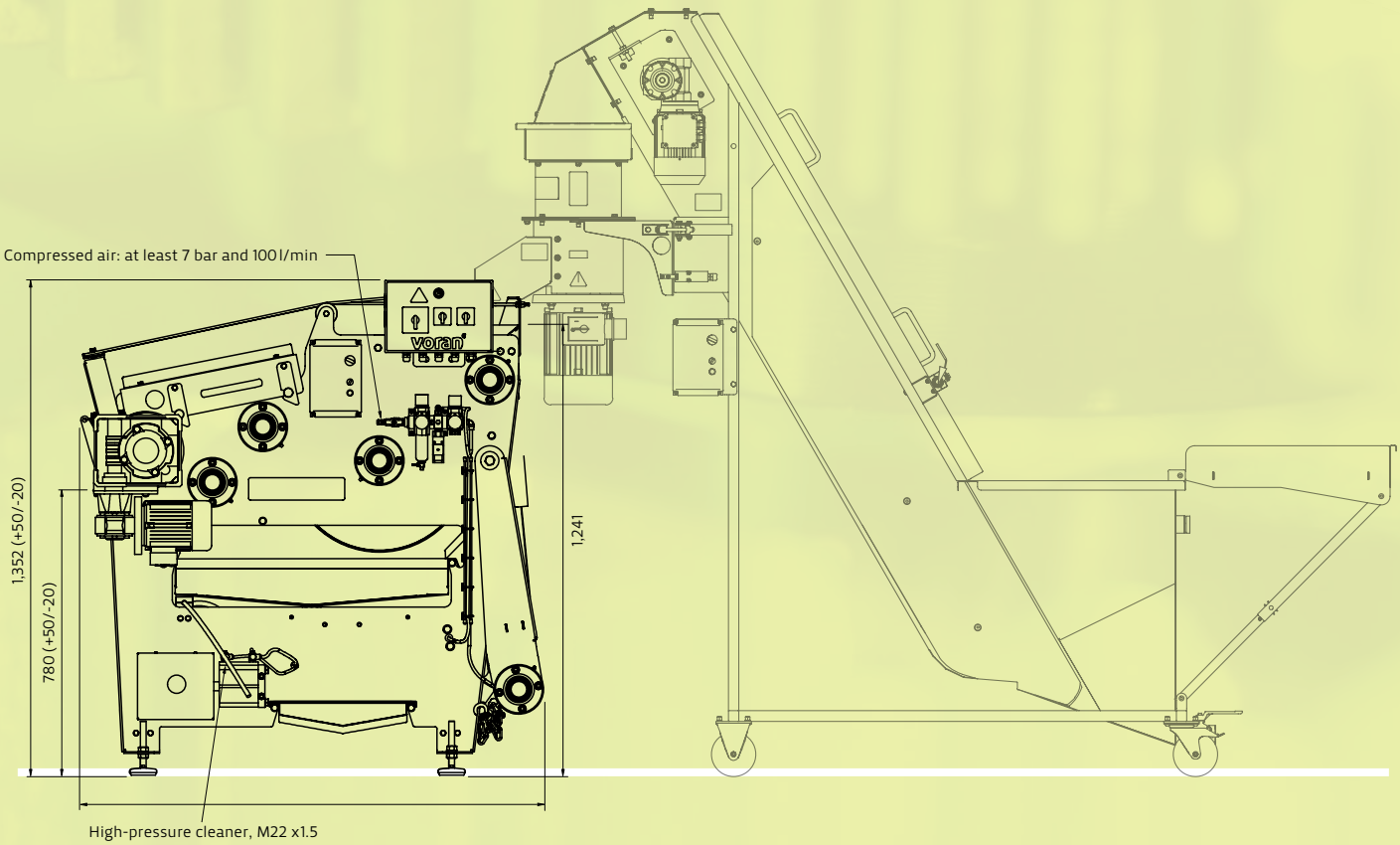


| Type | EBP350 | SA+RM2,2 |
|---|---|---|
| *Nominal output in kg/h* | 300* | 1,000* |
| *Belt width/length in mm* | 350 | 200 |
| *Belt speed in m/min* | 2 | |
| *Contact time in min* | 1 | |
| *Drive power+belt cleaning in kW* | 0.37 / 0.12 | Elevator 0.37 \| Mill 2.2 |
| *Electrical connection*** | 400 V / 50 Hz (three-phase) | 400 V / 50 Hz (three-phase) |
| *Minimum fusing in Ampere* | 16 | 16 |
| *Connector* | CEE 16 A 6h | CEE 16 A 6h |
| *Water consumption for belt cleaning in l/min* | 2 | |
| *Height mash acceptance in mm* | 1,265 | 840 |
| *Height dispensary in mm* | 700 | 1,338 |
| *Dimension length/width/height in mm* | 1,280 / 870 / 1,350 | 2,463 / 700 / 2,080 |
| *Design* | Stainless steel*** | Stainless steel*** |
| *Total weight in kg* | 350 | 150 \| Mill 32 |

*Depending on the raw material being processed **Other voltages and net specifications on request ***Complies with EC 1935/2004

Subject explicitly to technical changes and errors.

# voran.at

## voran business lines

- machines
- machine construction
- plant construction
- facades

## How to find us

voran Maschinen GmbH

*Sales*
Linzer Strasse 30
A 4650 Edt bei Lambach
T +43 (0) 72 49 / 444-0
F +43 (0) 72 49 / 444-888
office@voran.at
www.voran.at

*Production*
Inn 7
A 4632 Pichl bei Wels

*Service hotline*
T +43 (0) 72 49 / 444-200



**Folder ID** 600000577