voran® machinery

Belt press EBP500

English

Flavourful quality

Natural juices

Naturally unfiltered fruit and vegetable juices represent an important and tasty part of a healthy and balanced diet. They are a source of trace elements, minerals and natural vitamins in a balanced composition.

Higiene

Compliance with hygiene standards for raw materials and system operation is one of the most important requirements for preserving the valuable ingredients during processing. For this reason, we at voran® place great value on the easy cleaning and the compatibility with foodstuffs of all of our parts coming into contact with products.

Efficiency

Our modern fruit processing systems are distinguished by outstanding product quality, high juice yields—with low operating, servicing and maintenance expenditures—and a high intrinsic value.

Fruit processing lines

As a groundbreaking solution, every machine part is a perfectly coordinated modular fruit processing line for the production and marketing of natural, easily digestible and quality products with a long shelf life.

Experience meets innovation

For decades, voran®-Holding has stood for quality, dynamics and professionalism in the food processing sector. As a financially stable mid-sized company, we currently employ around 160 workers in Pichl bei Wels—in the heart of upper Austria.

voran®—our solutions of today are the standards of tomorrow.

Well thought-out solution

Continuously high yield

This belt press is operated fully automatic and continuous, requiring only very limited monitoring effort. The stepless regulation of the pressing speed and force guarantees optimal juice quality and a high yield of up to 75 %.
The belt press can be used universally for various types of fruit (stone fruits must be pitted before they are pressed), berries, vegetables, and for the dehydration of various materials.

Special attention was paid to the easy accessibility of all system parts and their easy cleaning.

The skimming frame can be removed without the aid of tools.
This allows interim and final cleaning to be carried out easily and efficiently.
All of the system parts coming into contact with products are suitable for use with foods.
Since the complete structure is made from stainless steel, it meets the strict critera and highest hygienic requirements for food processing.

The machine is fully assembled and ready to plug in.
It can be set up flush to the floor without a foundation.
Upon request, we will readily put your belt press into operation and also perform a service at the beginning of the season.

Juice collection basin 65l

Installation variants

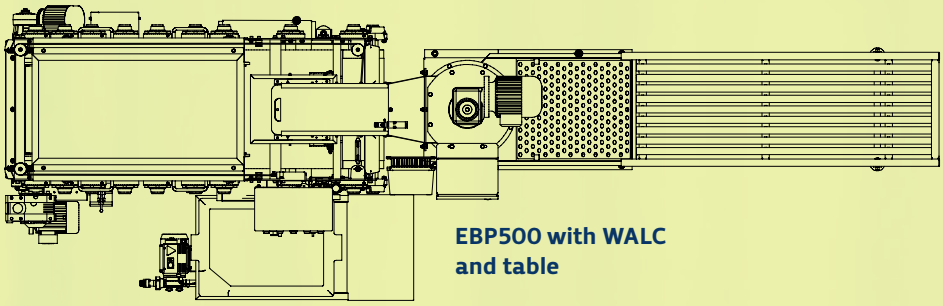

EBP500 with WALC and table

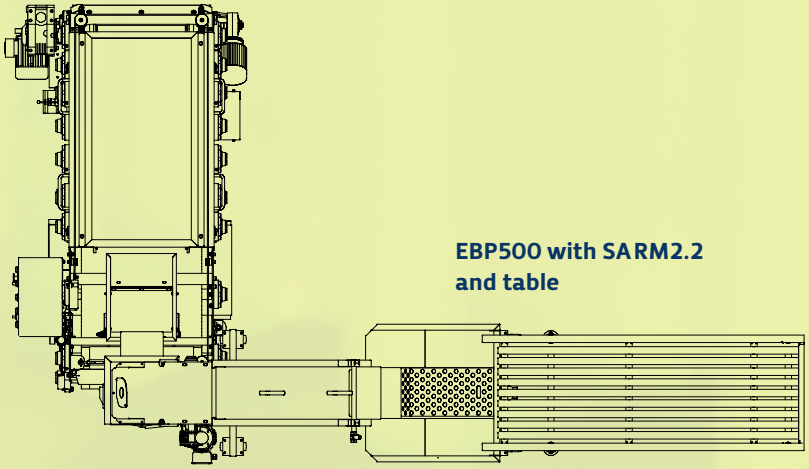

EBP500 with SARM2.2 and table

Design

Easy upgradable, optional brush cleaning for the removal of particles stuck in the problematic press cake

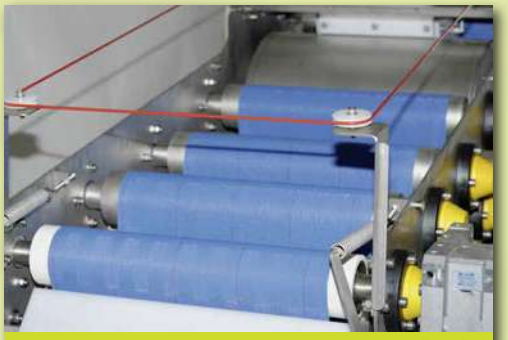

Easy cleaning capability with detached skimming frame

Fully automatic control of belt track

Highly efficient high-pressure cleaning of the belt with low water consumption.
Choice of draining either to the left or right.

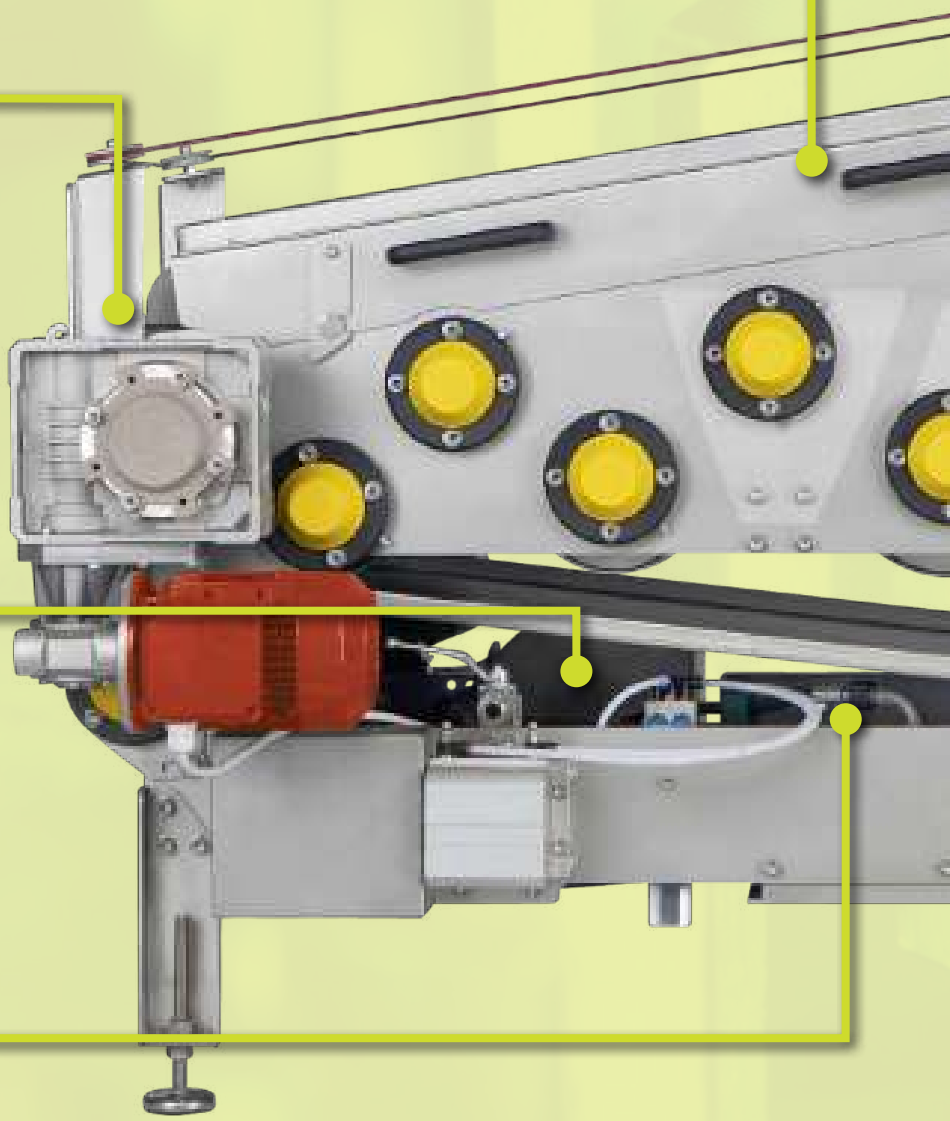

voran®

Spreader dosing can be adjusted to suit the product

Simple and central operation

Pneumatic bel tension for highest pressing force

Low oxidation of juice drain— either left or right

Combination

WA LC

Stainless steel washing system for fruits, consisting of washing vessel, vertical auger-type elevator and add-on centrifugal mill. In combination with a voran belt press, the filling level in the dosing box is automatically controlled. The turret enables a 90° rotation of the upper part for a space-saving operation and, respectively, easy cleaning.

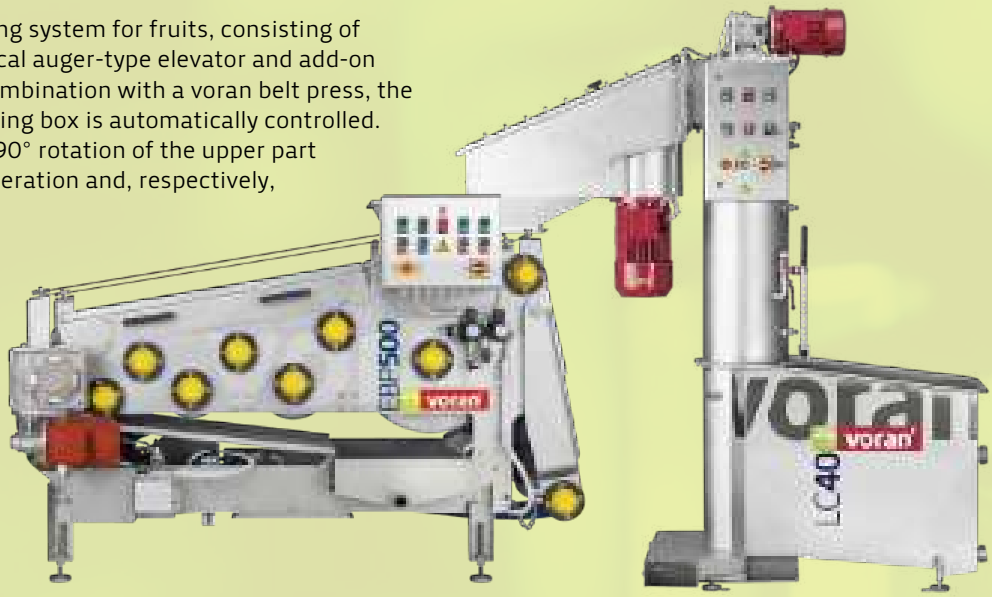

SA with RM2,2

A washing system for fruits and vegetables made of stainless steel, consisting of sorting grid, washing container, conveyor chain and mounted centrifugal mill RM2.2. The washing of the transported goods takes place in the washing container and by means of a fresh water shower on the conveyor belt. Due to frequency converters, the conveyor speed is continuously variable. The inclined elevator is suited for the processing of various foodstuff such as, e. g., fruit, berries or vegetables.

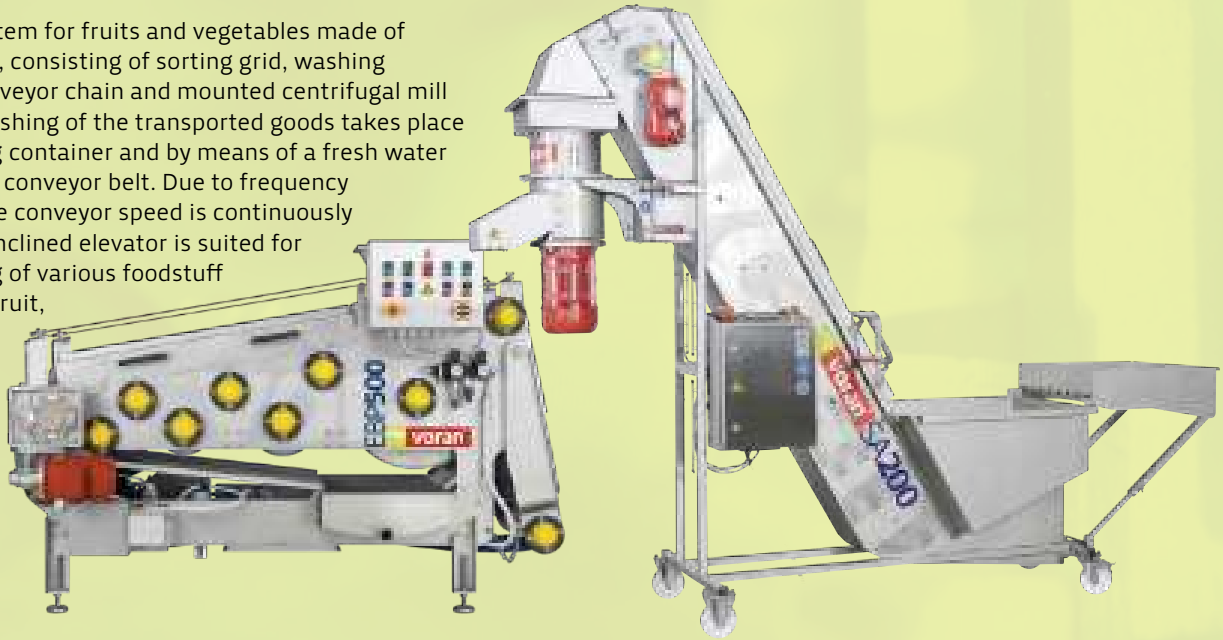

Accessories

Compressor

Kaeser Classic Mini

For belt tension and adjustment.

High-pressure cleaner

Kärcher

For automatic cleaning of the belt.

Technical data

EBP500

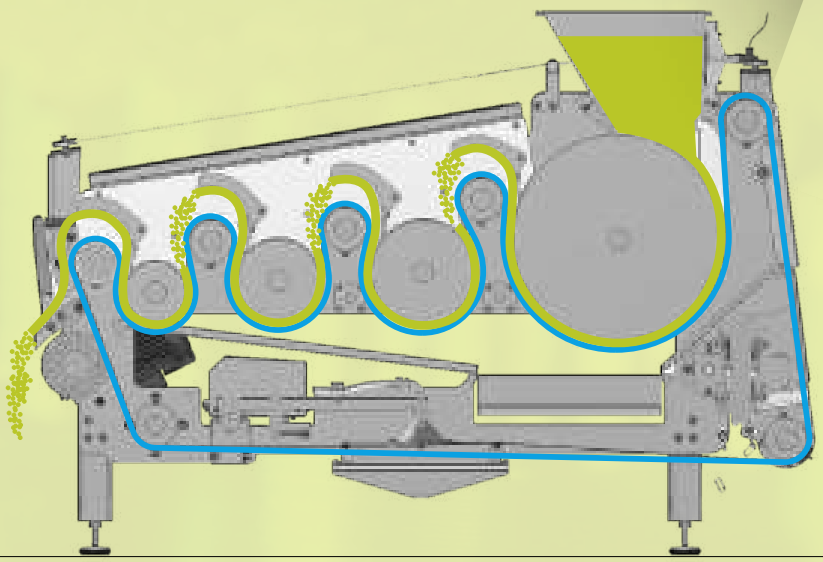

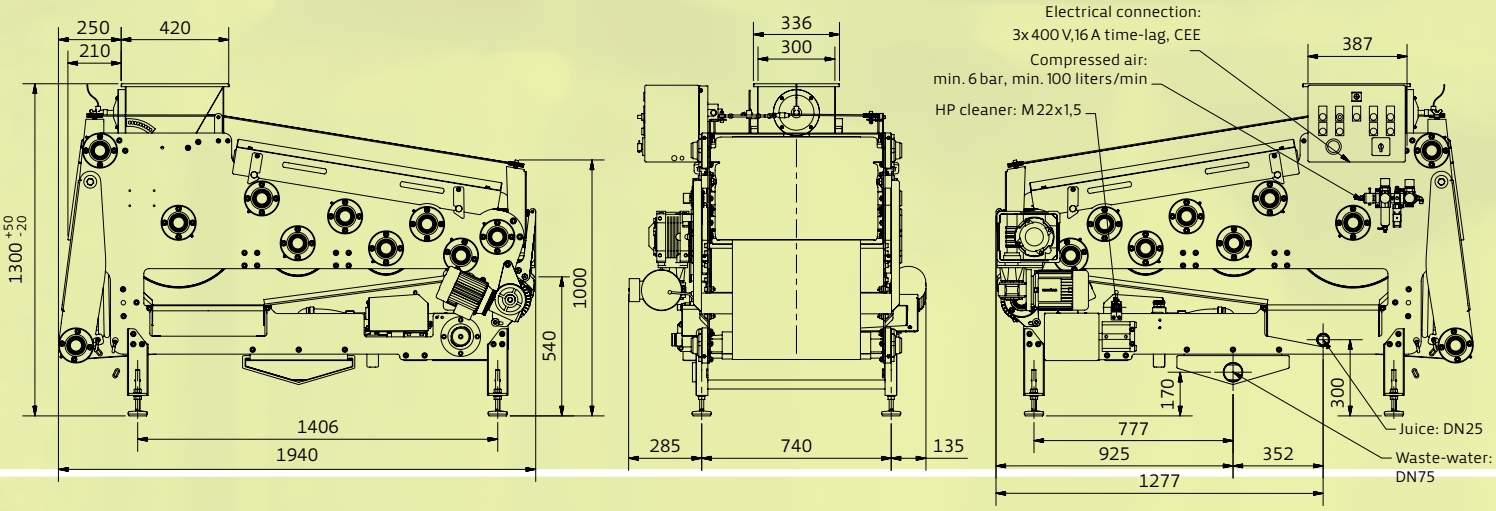

Model	EBP500
*Maximum throughput in kg/h**	700
Belt width / belt length in mm	1,940 / 1,160
Belt speed in m/min	1.4 – 3.6
Contact time in min	1.8 – 3.8
Motor power in kW	Drive motor 0.55 / washing system motor 0.12
Electrical connection	3 x 400 V / 50Hz
Minimum fuse protection in A	16 (time-lag)
Plug	CEE 16 A 6h
Water consumption for belt cleaning in l/min	3
Height of the mash intake in mm	1,300
High of the pomace discharge in mm	480 / 730
Length/width/height dimensions in mm	1,940/1,160/1,300
Total weight in kg	520

*dependent on the processed raw material

Expressly subject to technical changes and errors.

voran.at

voran® business lines

- machines
- manufacturing
- meat solutions
- facades

How to find us

voran Maschinen GmbH
Production & Sales
Inn 7
A 4632 Pichl bei Wels
Austria | Europe

T +43 (0) 72 49 / 444-0
F +43 (0) 72 49 / 444-888
office@voran.at • www.voran.at

Service hotline
T +43 (0) 72 49 / 444-200

Folder ID 600000742