voran® machinery

Belt press EBP580

English

Delicious quality

Natural juices

Naturally cloudy fruit and vegetable juices represent an im-portant and tasty element of healthy and balanced nutrition. They are a source of nutrients, minerals and natural vitamins in a balanced composition.

Hygiene

The maintenance of hygiene for the raw materials and mechanical operations is one of the most important requirements so that the valuable ingre-dients are retained during processing. Therefore at voran® we focus on simple cleaning and the food-grade quality of all parts that touch the product..

Profitability

Our modern fruit processing equipment is char-acterized by excellent product quality, high juice yield — at extremely low operating, maintenance and repair costs — and high value maintenance.

Fruit processing lines

As an innovative solution each machine is part of a per-fectly matched modular fruit processing line for producing and marketing natural, digestible, long-life, high-quality products.

Experience meets innovation

For decades voran® has stood for quality, dynamism and professionalism when it comes to food processing. As a financially stable, medium-sized company, we currently employ around 160 people in Pichl bei Wels — in the heart of Upper Austria.

voran® – our solutions for today are the standard for tomorrow.

Well thought-out solution

Continuously high yield

This belt press is operated fully automatic and continuous, requiring only very limited monitoring effort. The stepless regulation of the pressing speed and force guarantees optimal juice quality and a high yield of up to 75 %. The belt press can be used universally for various types of fruit (stone fruits must be pitted before they are pressed), berries,vegetables, and for the dehydration of various materials.

The press produces cold pressed juice, ideally suited for further processing by high pressure pasteurising.

Special attention was paid to the easy accessibility of all system parts and their easy cleaning.

All parts which need to be removed for the daily cleaning can be removed by one person and without tools. This al-lows interim and final cleaning to be carried out easily and efficiently. All of the system parts coming into contact with products are suitable for use with foods. Since the com-plete structure is made from stainless steel, it meets the strict criteria and highest hygienic requirements for food processing.

The machine is fully assembled and ready to plug in. It can be set up flush to the floor without a foundation. Upon request, we will readily put your belt press into operation and also perform a service at the beginning of the season.

Design

Easy access to machine parts for cleaning

Robust, self-explanatory touchscreen, also to operate with gloves, impervious to splashes

fault description in plain text

Product-specific adjustable dosing (film thickness)

Robust roller bearings and spherical roller bearings

Fully automatic control of belt track

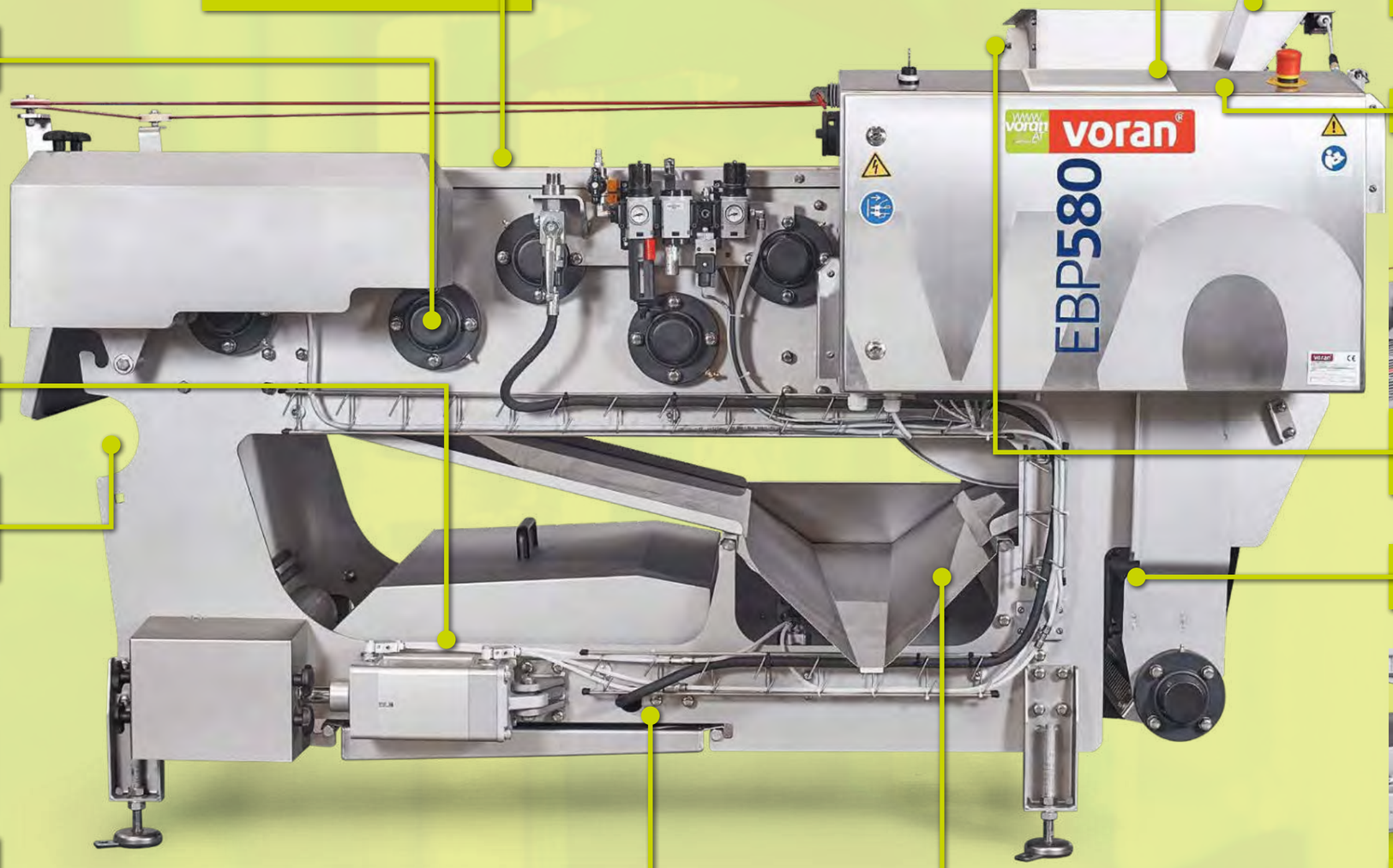

Simple and central operation

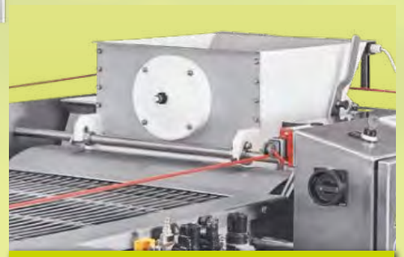

Sensor to control upstream voran® machines as washing machine or mash pump

Easy upgradable, optional brush cleaning for the removal of particles stuck in the problematic press cake

Pneumatic belt tension for highest pressing force

High pressure belt cleaning interval-controlled adjustable on the display

Juice outflow — optionally left or right

Further advantages of the EBP580

The lightweight attachments can be removed toolless and enable free access for the daily cleaning. Images with removed parts.

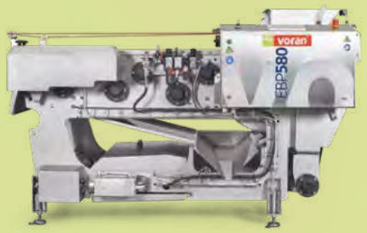

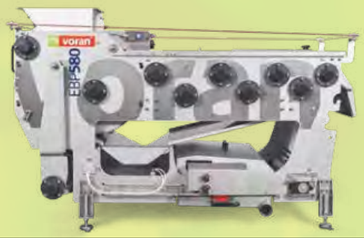

Combinations

WALC40

Stainless steel washing system for fruits, consisting of washing vessel, vertical auger-type elevator and add-on RM40 centrifugal mill. In combination with a voran® belt press, the filling level in the dosing box is automatically controlled. The turret enables a 90° rotation of the upper part for a space-saving operation and, respectively, easy cleaning.

SA200-RM2,2

A washing system for fruits and vegetables made of stainless steel, consisting of sorting grid, washing container, conveyor chain and mounted centrifugal mill RM2,2. The washing of the transported goods takes place in the washing container and by means of a fresh water shower on the conveyor belt. Due to frequency converters, the conveyor speed is continuously variable. The inclined elevator is suited for the processing of various foodstuff such as, e. g., fruit, berries or vegetables.

SA 300

Our Elevator SA300 with pivoting centrifugal mill RM 4 in combination with a voran® belt press is ideally suitable for processing fruits and especially vegetables. Using the optional tool-kit the vegetables are crushed and prepared for the further processing optimally.

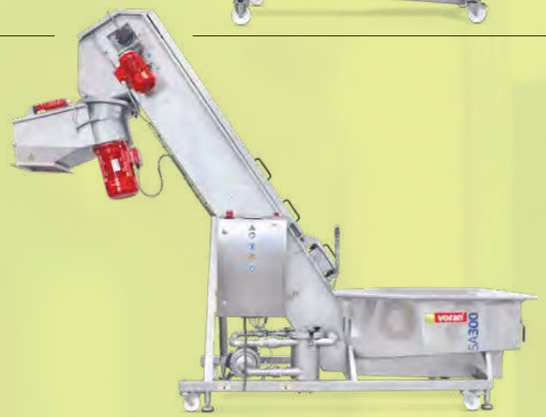

Accessories

High quality compressor and high-pressure cleaner are supplied as standard.

Technical data

EBP580

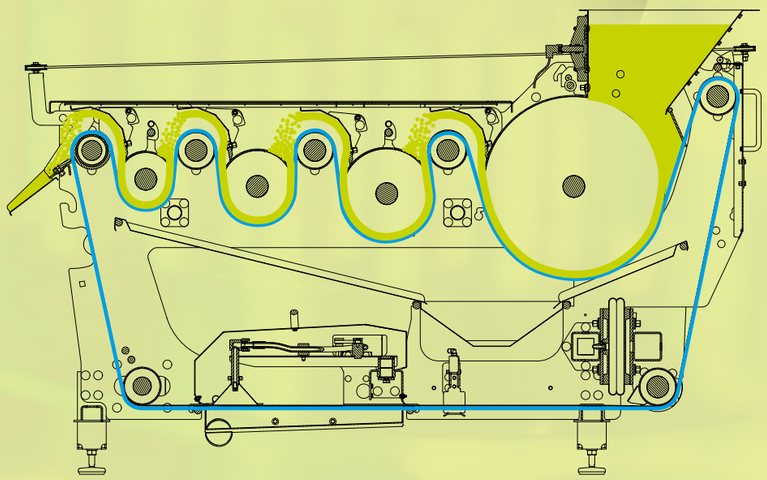

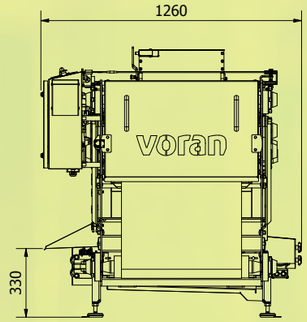

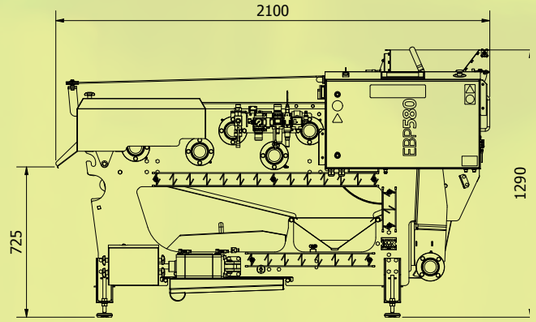

Type	EBP580
*Nominal output in kg/h**	1,000
Belt width/length in mm	580
Belt speed in m/min	2.1 – 5.5 (stufenlos)
Contact time in min	0.8 – 2.5
Drive power in kW	Antriebsmotor 0.55 / cleaning motor 0.37
*Electrical connection***	400 V / 50 Hz (three-phase, neutral line required)
Minimum fusing in Ampere	16 (träge)
Connector	CEE 16 A 6 h
Water consumption for belt cleaning in l/min	12
Height mash acceptance in mm	1,290
Height juice outlet / pomace discharge in mm	324 / 773
Dimension length/width/height in mm	2100 / 1260 / 1290
*Ausführung****	Edelstahl
Total weight in kg	540

*Depending on the raw material being processed **Other voltages and net specifications on request ***Complies with EC 1935/2004

Expressly subject to technical changes and errors.

voran.at

voran business lines

- maschines
- machine construction
- plant construction
- facades

How to find us

voran Maschinen GmbH
Production & Sales
Inn 7
A 4632 Pichl bei Wels
Austria | Europe
T +43 (0) 72 49 / 444-0
F +43 (0) 72 49 / 444-888
office@voran.at · www.voran.at

Service Hotline
T +43 (0) 72 49 / 444-200

Folder ID 2023_1_164644