voran® machinery

Belt press EBP650

English

Delicious quality

Natural juices

Naturally cloudy fruit and vegetable juices represent an important and tasty element of healthy and balanced nutrition. They are a source of nutrients, minerals and natural vitamins in a balanced composition.

Hygiene

The maintenance of hygiene for the raw materials and mechanical operations is one of the most important requirements so that the valuable ingredients are retained during processing. Therefore at voran® we focus on simple cleaning and the food-grade quality of all parts that touch the product.

Profitability

Our modern fruit processing equipment is characterized by excellent product quality, high juice yield—at extremely low operating, maintenance and repair costs—and high value maintenance.

Fruit processing lines

As an innovative solution each machine is part of a perfectly matched modular fruit processing line for producing and marketing natural, digestible, long-life, high-quality products.

Experience meets innovation

For decades voran® has stood for quality, dynamism and professionalism when it comes to food processing. As a financially stable, medium-sized company, we currently employ around 160 people in Pichl bei Wels—in the heart of Upper Austria

voran®—our solutions for today are the standard for tomorrow.

An ingenious solution

Continuous high yield

This belt press is operated completely automatically and continuously, with only very little supervision required. Optimum juice quality and a yield of up to 75% are guaranteed thanks to the variable speed and pressure control of the belt press, which can be used for a wide range of fruit (pomaceous fruit needs to be de-stoned before pressing), berries, vegetables and herbs and for dehydrating various produce.

Special attention has been paid during design to ensure accessibility of all components and easy cleaning. The central cover is easy to open on gas-filled struts. All components such as metering box, mash feed, juice flow plate, juice basin etc. can be removed without tools. As a result the equipment can be cleaned effectively during and after processing.

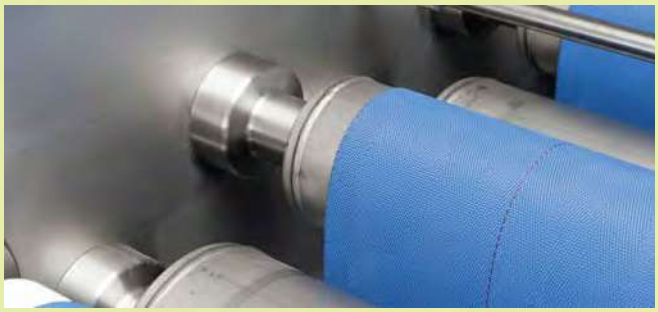

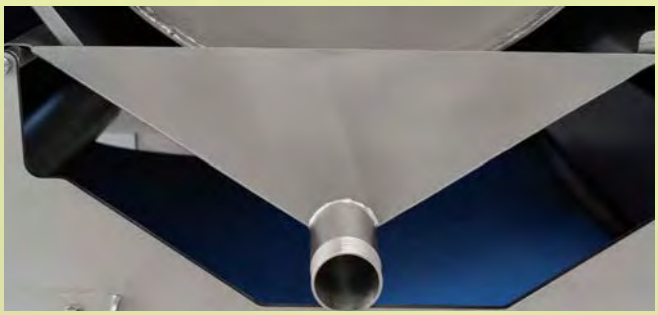

All parts that come into contact with the product are food-contact compliant. All parts are made from stainless steel to fully meet the strictest hygiene requirements for food and drink processing.

This machine is characterised by its low operating and maintenance costs. One reason for this is the use of press rollers that are mounted on fixed shafts without being subject to alternating bending stress. Using an endless screen belt guarantees improved retention of the mash as well as extending service life. Screen belts with a closure are available for temporary repairs.

The machine is assembled ready-to-plug-in and can be set up on floors without a special foundation. If desired we would be pleased to start up the belt press for you, as well as provide a service before the start of each season.

Design features

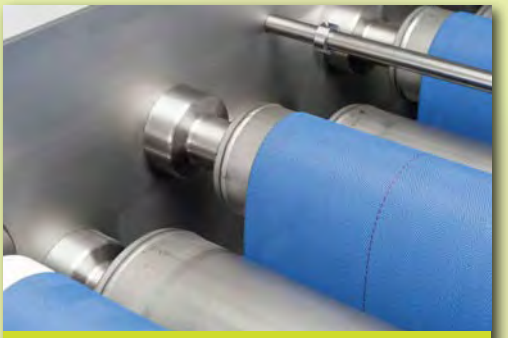

Press rollers on fixed shafts with encapsulated roller bearings—no alternating bending stress

Optional brush cleaning system can easily be retrofitted for removing pressed-in particles when working with problematic press cake

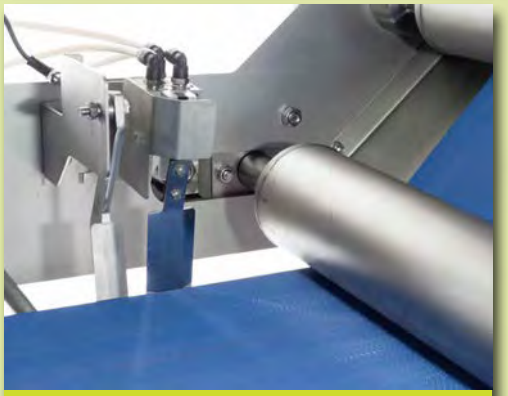

Fully automatic control and emergency stop if belt off-tracks

Completely automatic high-pressure belt cleaning: highly efficient and low water consumption—dDrain to left or right

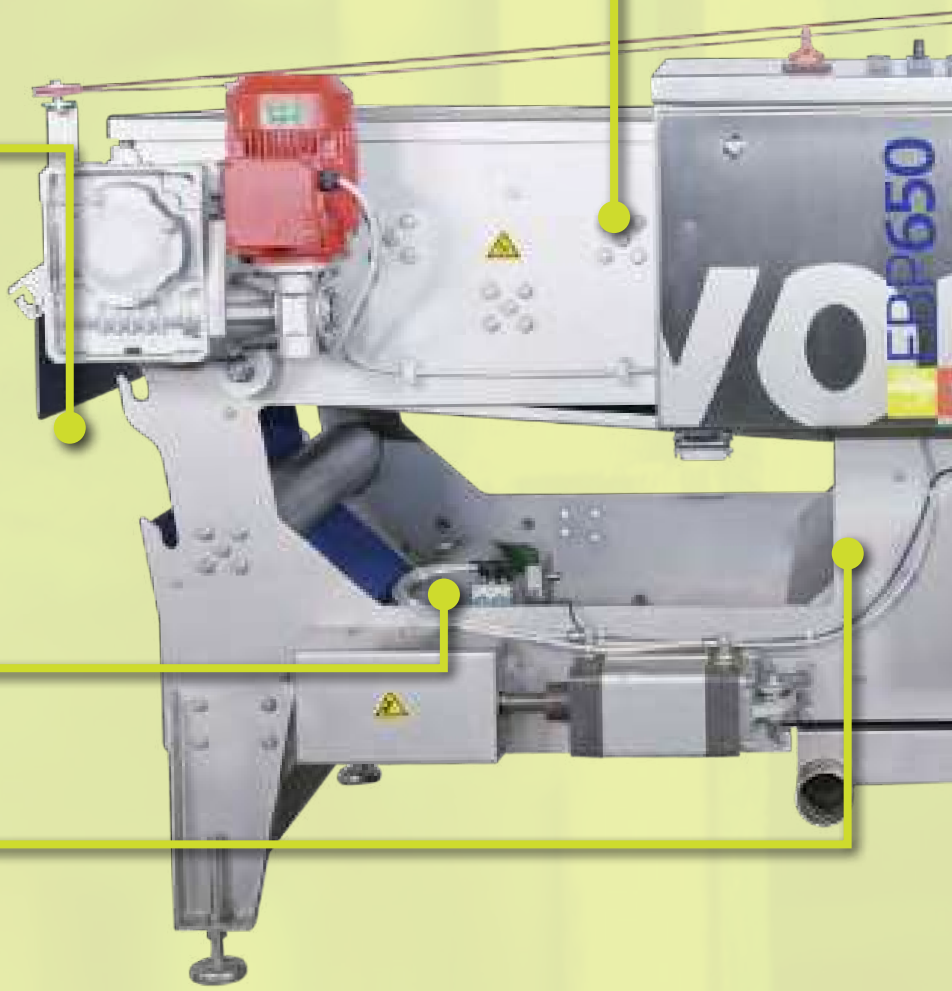

voran®

Straightforward and central operation

Product-specific adjustable metering

Pneumatic belt tension for highest pressing pressures

Juice drains to the left or right— free of oxidation

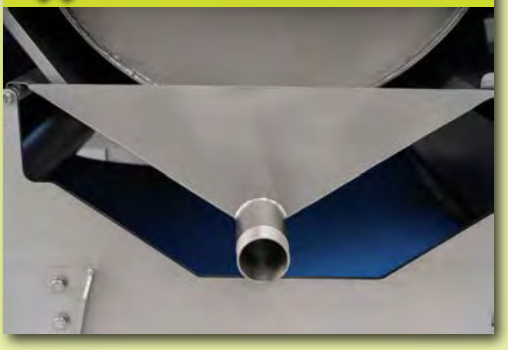

Combination

WAR65

The WAR65 combines performance and robustness with space-saving design. Easy cleaning thanks to the rotating turret. The flow rate of mash is controlled depending on the requirements of the belt press. The quality of the mash can be adjusted to the type and quality of fruit being processed using replaceable screens—no tools required. This system is suitable for processing a wide range of fruit and vegetables with a capacity of up to 6,000 kg per hour.

Image: Operation on the opposite site by default.

100 l juice basin

The juice runs directly from the belt press through a removable, large surface 1 mm coarse screen to be collected in a 100 litre buffer tank. A stainless steel level switch automatically controls the impeller-type pump that is designed to carefully convey the product at flow rates of up to 1,800 litres per hour. The pump can also be switched on and off manually if the tank needs to be drained.

Accessories

Compressor

Kaeser Classic Mini

To tension and regulate belt pressure.

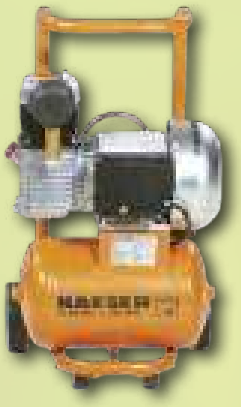

High pressure cleaner

Kärcher HD7/18C

For automatic belt cleaning.

Technical data

EBP650

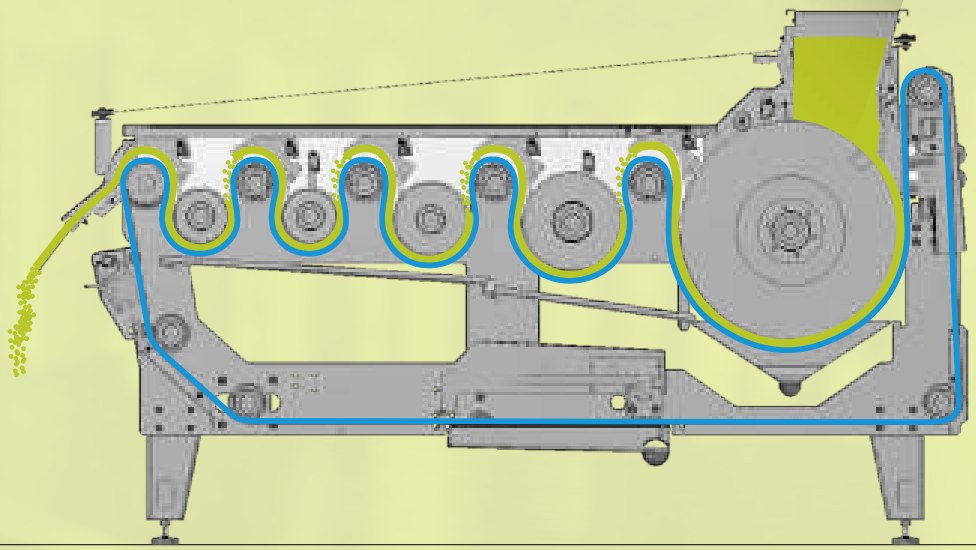

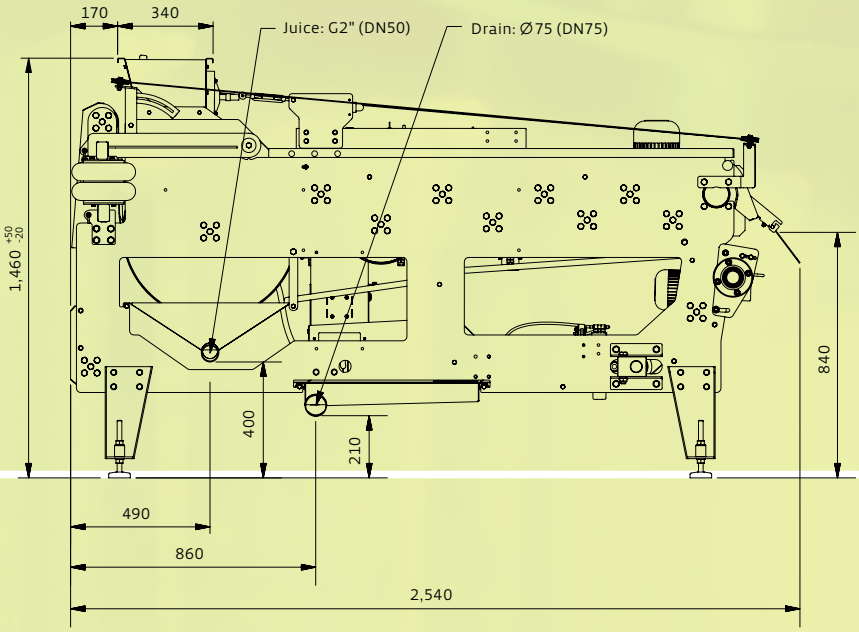

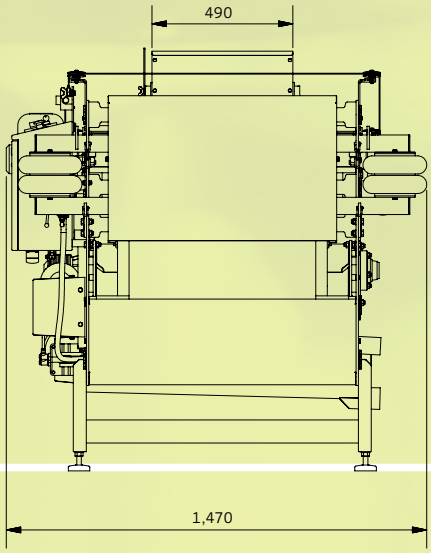

Type	EBP650
*maximum capacity in kg/h**	1,500
belt width	650
belt speed in m/min	0.9 – 1.8
contact time in min	1.9 – 3.8
motor rating in kW	drive motor 0.55 / rinsing system motor 0.12
elektrischer Anschluss	3 x 400 V / 50Hz
minimum fused protection in A	16 (slow-acting)
plug	CEE 16 A 6h
water consumption for belt cleansing in l/min	3
height of mash feed in mm	1,460
height of pomace ejector in mm	840
dimensions height/width/depth in mm	2,540 / 1,470 / 1,460
total weight in kg	1,060

*depending on material being processed. Technical updates and any errors expressly excepted.

voran.at

voran business lines

- machines
- machine construction
- plant construction
- facades

How to find us

voran Maschinen GmbH
Production & Sales
Inn 7
A 4632 Pichl bei Wels
Austria | Europe
T +43 (0) 72 49 / 444-0
F +43 (0) 72 49 / 444-888
office@voran.at · www.voran.at

Service hotline
T +43 (0) 72 49 / 444-200

Folder ID 600003354