voran® machinery

Fruit mills RM1,5 RM2,2 RM5,5

RM2,2

RM1,5

RM5,5

English

Powerful in every size

RM1,5—Base model

Centrifugal mill with exchangeable stainless steel screens for setting the grinding fineness. Ideal for mashing for distilleries. Suitable for pomaceous fruit, stone fruit and berries.

Suitable for producing cold-pressed fruit and vegetable juices.

Washing Milling	Pressing	Pasteurising
RM series	100/180P2 EBP series, 60K, 100K	PA series

Plastic hopper

Rubber seal

Stainless steel mill and drain

Sturdy mill drive unit

Solid steel profile frame for added stability (optional)

RM2,2—Compact and efficient

Centrifugal mill with exchangeable stainless steel screens for setting the grinding fineness. Ideal for mashing for distilleries. Suitable for pomaceous fruit, stone fruit and berries.
The centrifugal mills RM2,2 and RM5,5 can also be used for processing quinces.

Suitable for producing cold-pressed fruit and vegetable juices.

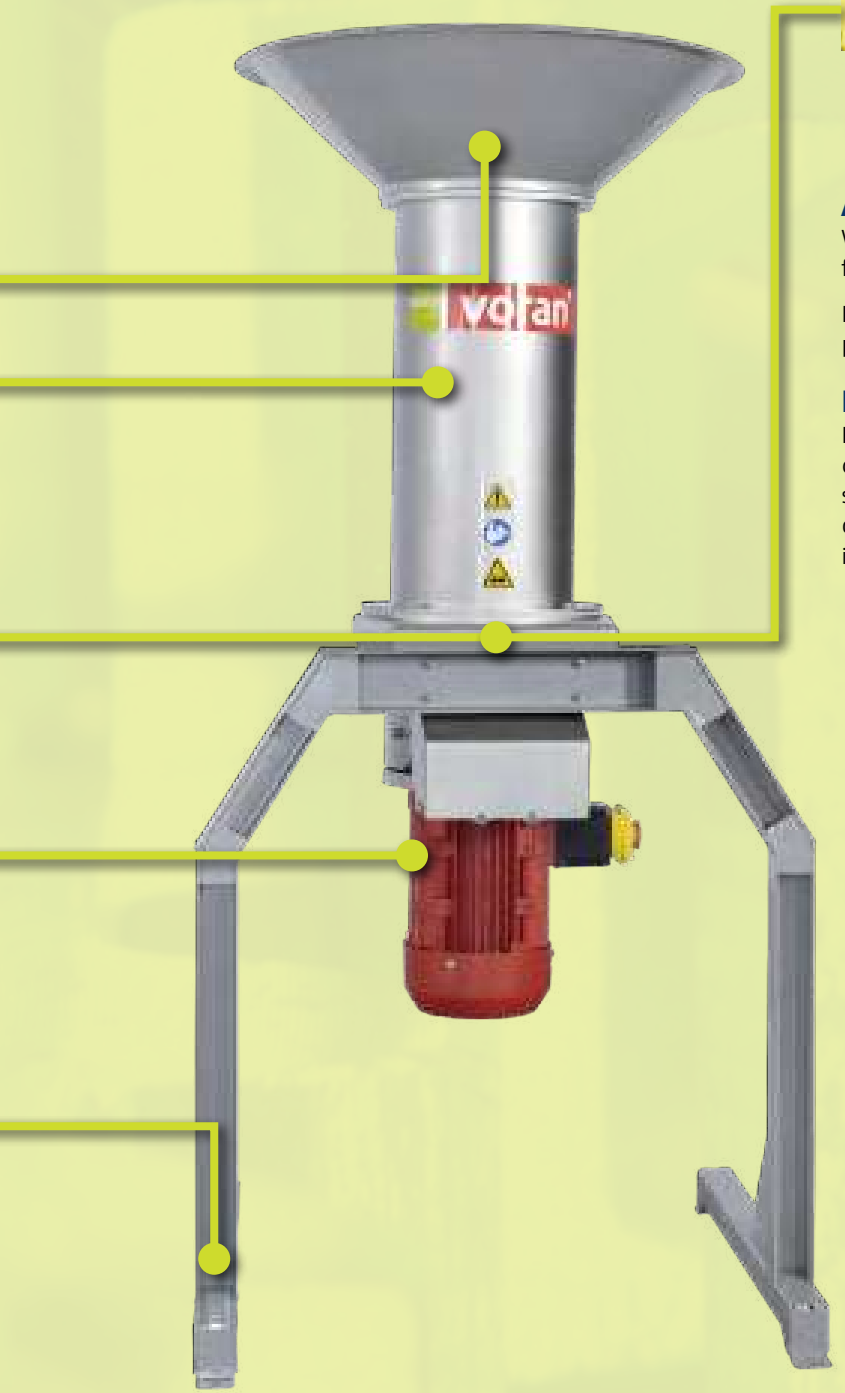

Achieve more with voran®

We recommend our combined WALC40/WAR65 and SA200 for higher performance in automated processes.

In addition to this, we also offer universal crushers for processing foods such as bread residues, grains or nuts.

Experience meets innovation

For decades, voran® Holding has stood for quality, dynamics and professionalism in the food processing sector. As a financially stable mid-sized company, we currently employ around 160 workers in Pichl bei Wels—in the heart of Austria.

RM5,5—The universal device

Centrifugal mills with replaceable screens. This makes it possible to achieve any desired mash fineness—ideal for the mashing for distilleries. The choice of the most diverse crushing tools and grinding screen enables this mill to also be used for the production of all kinds of fruit and vegetable juices.

Suitable for producing cold-pressed fruit and vegetable juices.

Options

- Different screens
- Short rotor
- 60-mm foot extension for mash trough
- Corresponding mash troughs available in the sizes 200 l (image) and 300 l

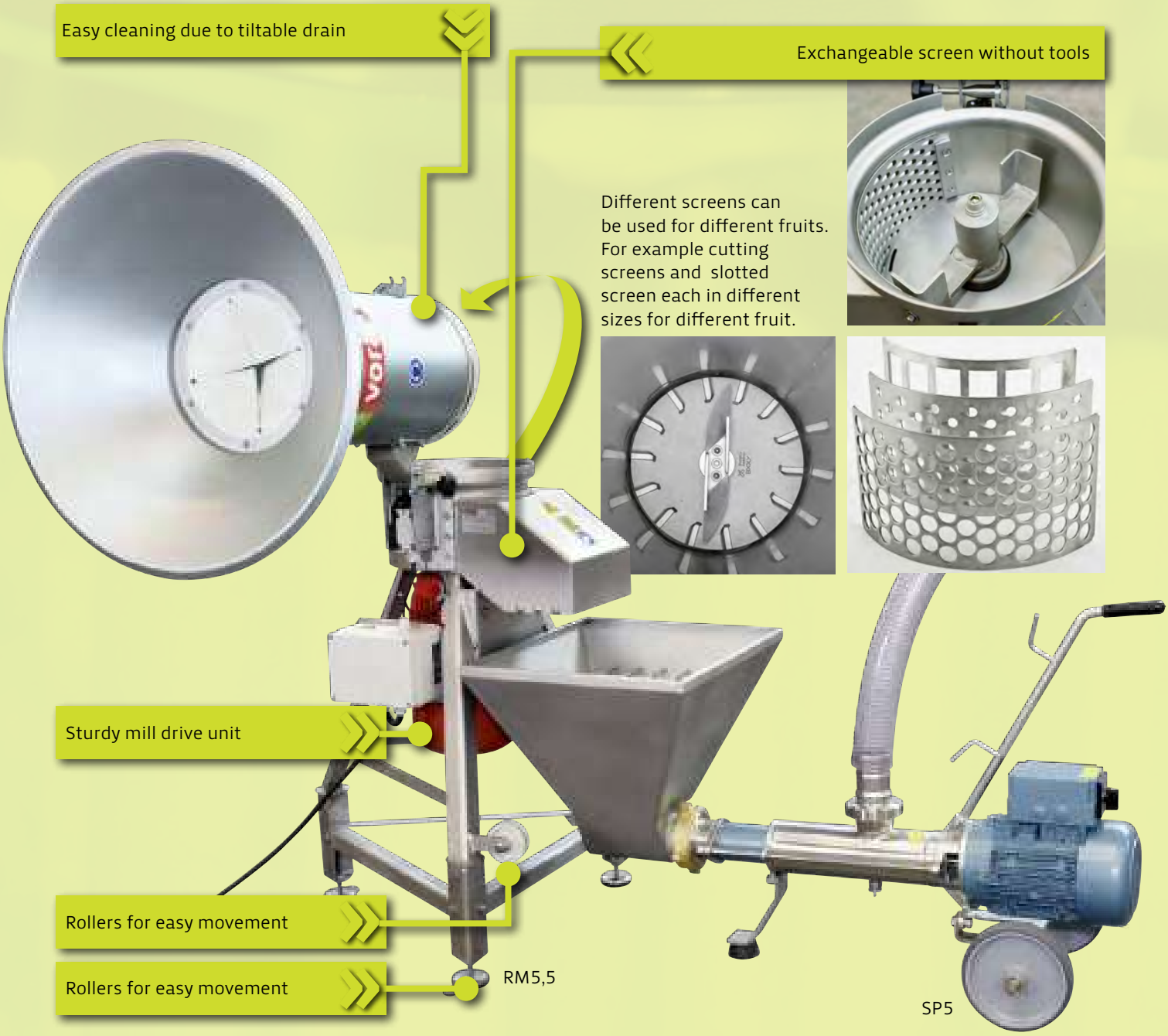

Technical data

RM1,5

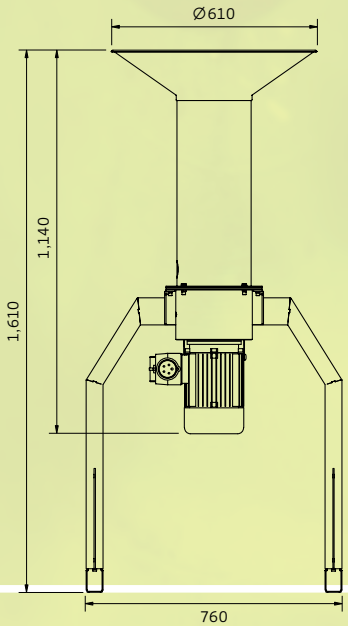

RM2,2

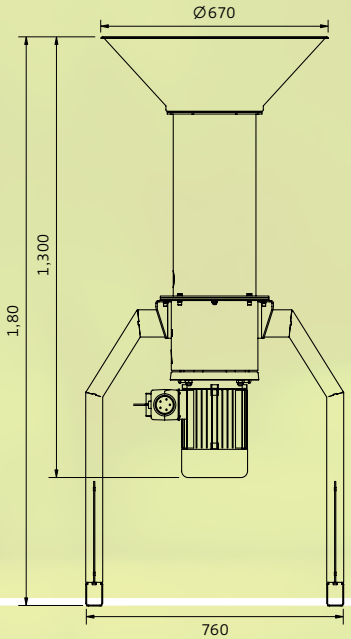

RM5,5

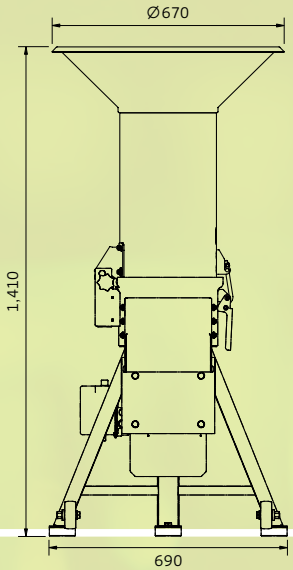

Model	RM1,5	RM2,2	RM5,5
Rated throughput in kg/h	650	1,000	4,200
Rated throughput in kg/h	1.5	2.2	5.5
*Electrical connection**	400 V/50 Hz *(three-phase, 10 A)*	400 V/50 Hz *(three-phase, 16 A)*	400 V/50 Hz *(three-phase, 16 A)*
Electrical fuse protection in A	10	16	16
*Length/width/height dimensions in mm***	760/670/1,610	760/670/1,680	690/730/1,410
*Filling height in mm****	1,610	1,680	1,410
High of the mash discharge in mm	690	650	470
Weight in kg (without/with frame)	34/48	45/59	88
Material	1.4301 / AISI 304	1.4301 / AISI 304	1.4301 / AISI 304
Scope of supply	Cutting screen 8 mm Round hole screen 16 mm	Cutting screen 9 mm Round hole screen 16 mm	Cutting screen 9 mm

* Other mains voltages and designs on request ** with stand *** usage with stand

Expressly subject to technical changes and errors

voran.at

voran business lines

- machines
- machine construction
- plant construction
- facades

How to find us

voran Maschinen GmbH
Production & Sales
Inn 7
A 4632 Pichl bei Wels
Austria | Europe
T +43 (0) 72 49 / 444-0
F +43 (0) 72 49 / 444-888
office@voran.at · www.voran.at

Service hotline
T +43 (0) 72 49 / 444-200

Folder ID 600004921