voran® machinery

De-stoning and mashing units EP500 EP1000

Stone removal and passing systems EP500 EP1000 10/19

English

Stone removal and passing

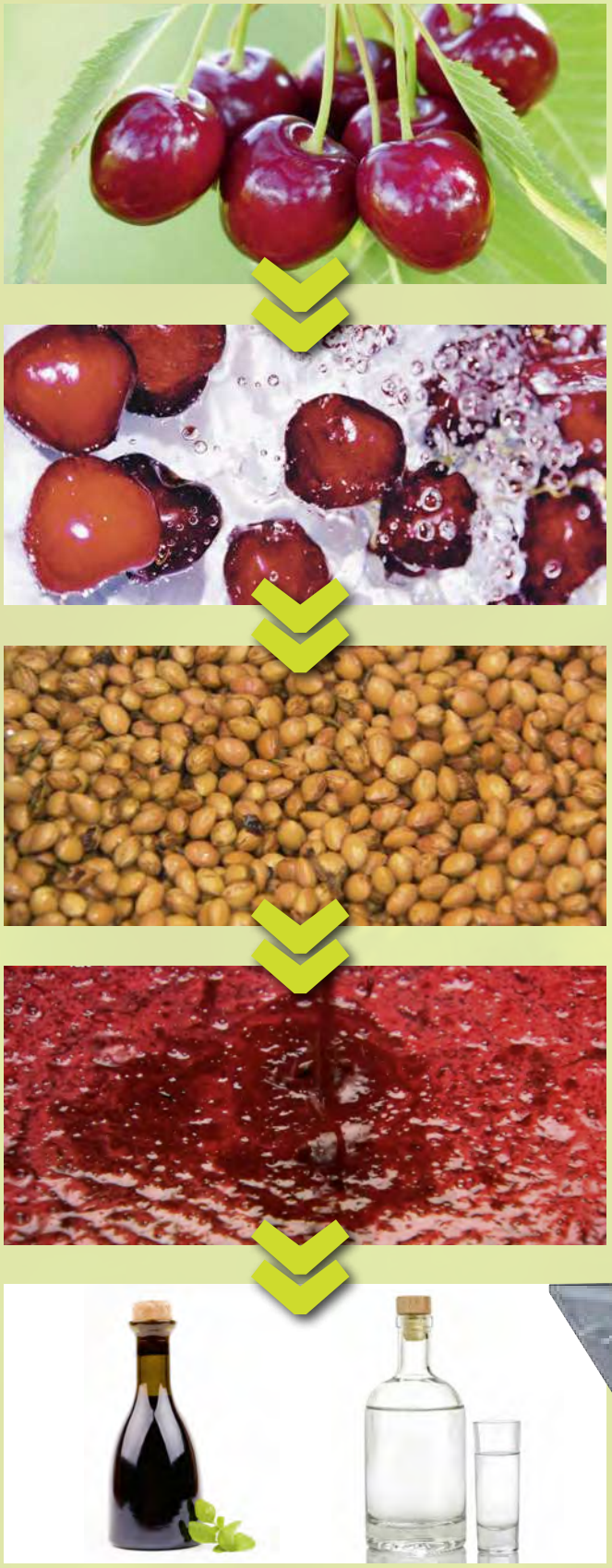

Drain

The raw goods are inserted into the filling funnels that were designed for standard boxes and fed in doses via a central screw to the rotor's rubber lips. Driven by belts, these gently throw the raw goods through the installed drum sieve. The mash passed in this way flows through the drum sieve into the mash capture container to the mash dispensing connection DN65.

The separated stones are continuously moved backwards in the drum sieve and from there dispensed into a container located for that purpose. The removable central cover and the simple sieve removal/exchange enable quick and effective intermediate and final cleaning.

The best basis for further processing—no matter whether it is used for juicing, crushing, vinegar or other products.

Compact, powerful and flexible

Minimum floor space due to its compact construction, powerful drive with adequate reserves for ongoing use, easily exchanged sieves with different diameters for processing different core sizes. These are just a few of the points that our designers focused on when developing the de-stoning and mashing units.

Our mashing units are basically suited to separating hard and soft materials. It is therefore possible, for example, to separate strawberries cleanly from leaves and stems or ripe William's pears from the cores and stems. After cooking, apples can be separated from cores, stems and skin.

We offer the suitable mash pumps for our de-stoning and mashing units.

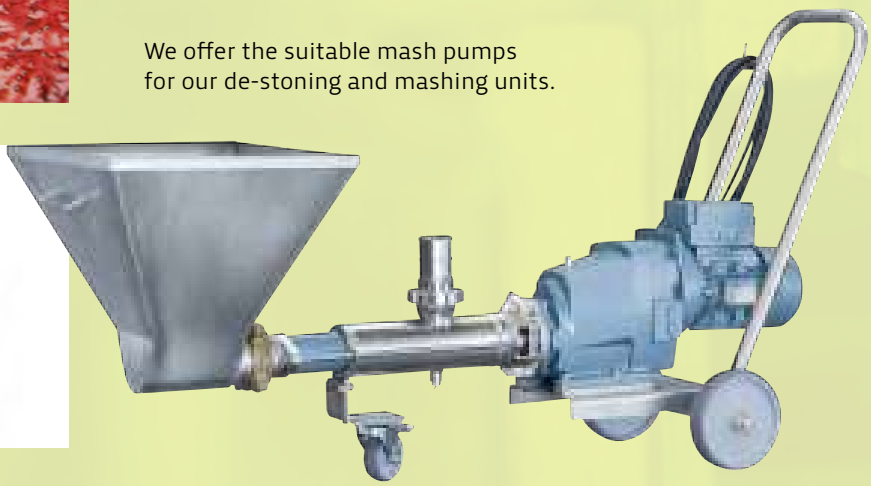

voran®

The compact one — EP500

Various sieve inserts (0,5–10 mm) for different types of fruit and vegetables. Passing function with 0,5 and 1 mm screen.

No matter the size of the stone, you always get the ideal mash.

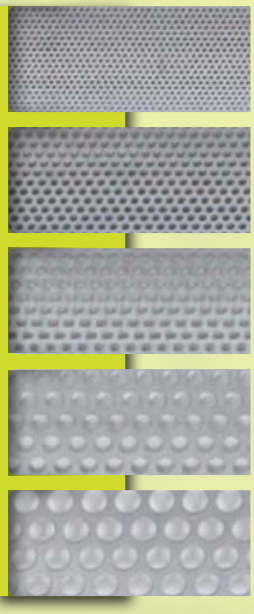

Simple tension mechanism for drive belt

Robust drive unit

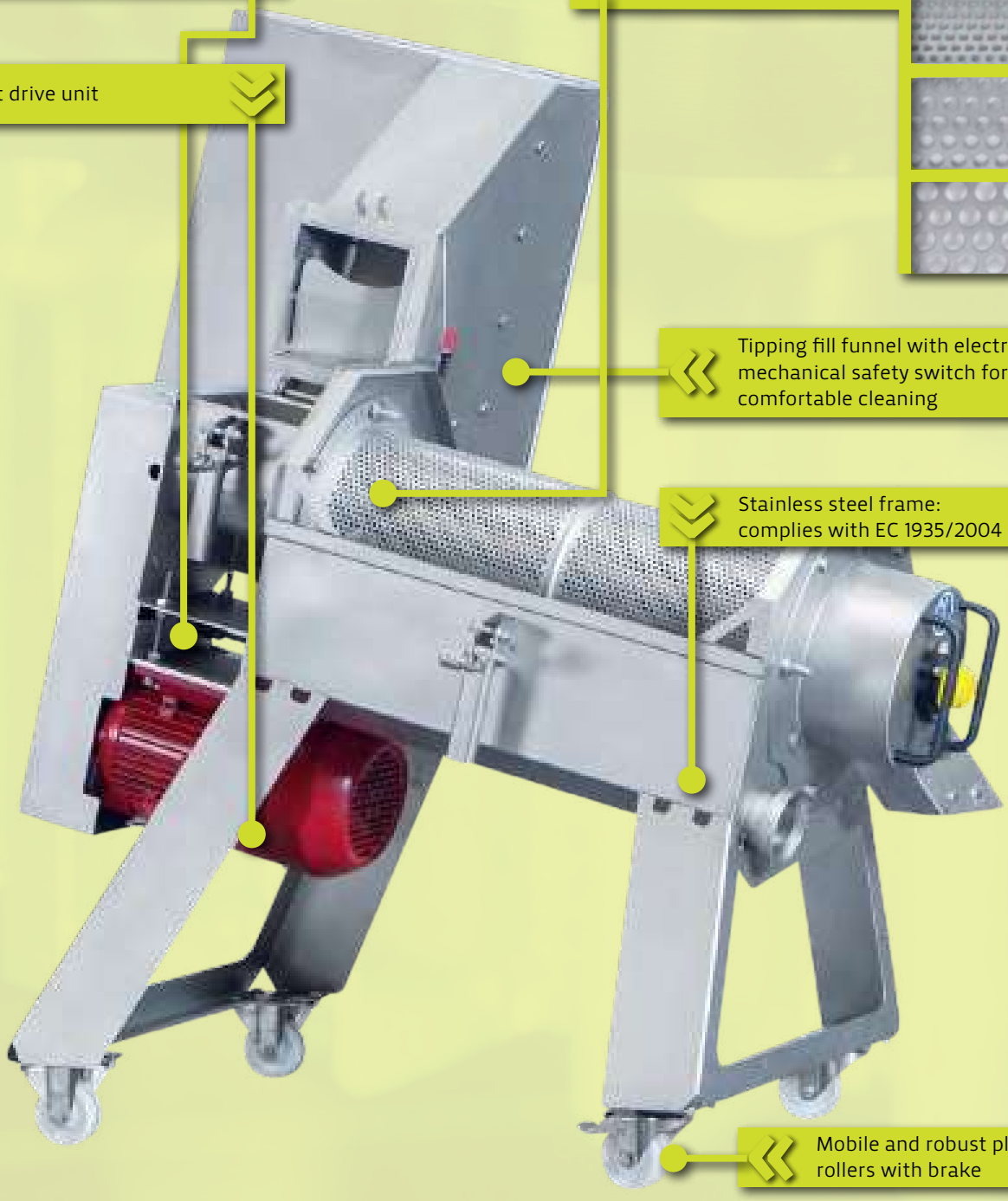

Tipping fill funnel with electro-mechanical safety switch for comfortable cleaning

Stainless steel frame: complies with EC 1935/2004

Mobile and robust plastic rollers with brake

The high performance one — EP1000

Two sizes—one quality

The de-stoning and mashing units EP500 and EP1000 are differentiated by the construction size and the associated throughputs. These are understood as guideline values at 500 kg and 1,000 kg and may vary depending on the ripeness.

The result is sure to persuade you in either case: cleanest separation of core and fruit and perfect consistency of the passed fruit mass. There is nothing to prevent further processing no matter the method used.

Wash	Remove stone Pass	Presses
SA series	EP500 EP1000	EBP series

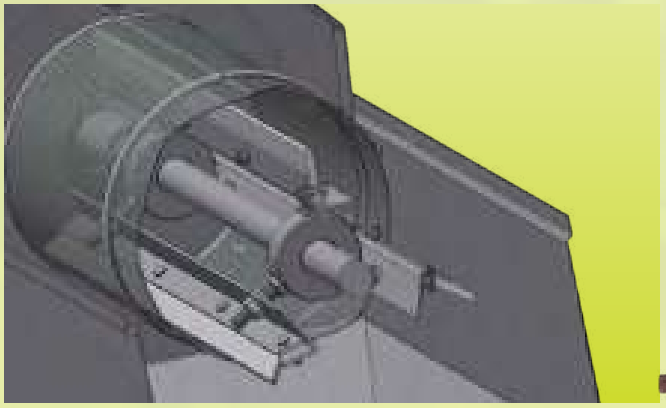

Technical data

EP500

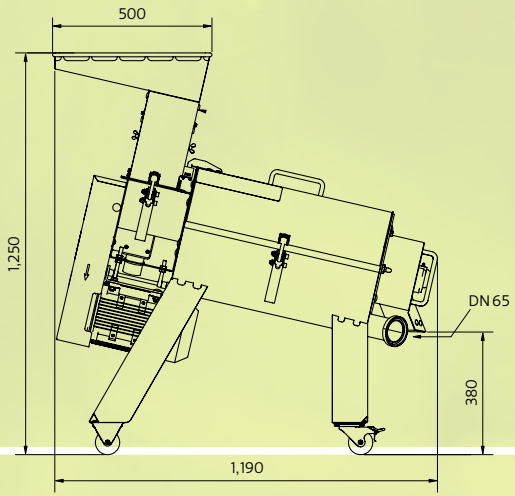

EP1000

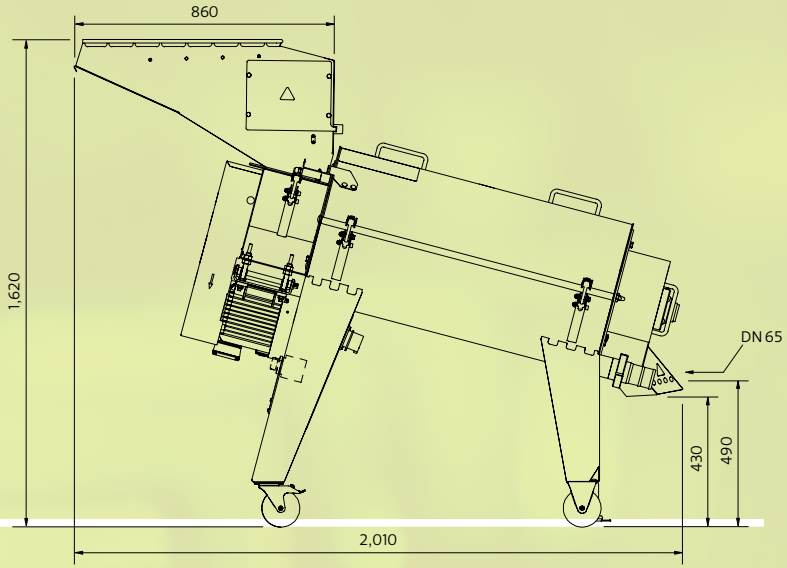

Type	EP500	EP1000
Nominal output in kg/h	500	1,000
Motor output in kW	3.0	5.5
*Electrical connection**	400 V / 50 Hz *(three-phase, 16 A)*	400 V / 50 Hz *(three-phase, 16 A)*
Dimensions length/width/height in mm	1,190 / 640 / 1,250	2,010 / 770 / 1,620
Weight in kg	110	220
Feed height in mm	1,250	1,620
Connection for mash pump	DN 65 AG	DN 65 including tube connection (nozzle)
Mash dispensing height in mm	340	490
Stone dispensing height in mm	380	430
Material	1.4301 / AISI 304	1.4301 / AISI 304

* Other voltages and net specifications on request

Subject explicitly to technical changes and errors.

voran.at

voran business lines

- machines
- machine construction
- plant construction
- facades

How to find us

voran Maschinen GmbH
Production & Sales
Inn 7
A 4632 Pichl bei Wels
Austria | Europe
T +43 (0) 72 49 / 444-0
F +43 (0) 72 49 / 444-888
office@voran.at · www.voran.at

Service hotline
T +43 (0) 72 49 / 444-200

Folder ID 600004205