voran® machinery

Filler systems Series filler R4/R6 MBF750 MBF750-R6

MBF750-R6 with table

R4

English

MBF750-R6

Bag-in-Box filler combined with a 6-position bottle inline filler for the filling of fruit or vegetable juices. Intended for the filling of standard bags with 3, 5, 10 or 20 litres and bottles from 0.25 to 2 litres.

The MBF750-R6 is not designed for the simultaneous filling of bottles and bags.

Each of the four pre-set filling volumes can be reprogrammed by the operator to any desired value.

MBF750-R6

MBF750-R6 with table

voran®

Pressing	Pasteurising	Pasteurising
100/180P2 EBP series	PA300E PA300E automatic	R series MBF series

MBF750

- Display of the current filling weight
- Protected weighing cells permit high repeat accuracy filling
- Storage compartment for bags and boxes

- Easy box-filling on separate storage surface
- Keg filling unit

The benefits of the voran® filler systems

- Space-saving installation thanks to compact design
- **Bag:** faster filling quantity change possible using selector switch (4 filling quantities can be selected—such as 3/5/10/20 litres)
- **Bottles:** Filling height adjustable up to the brim; bottle size of 0.25 to 2 litres (also special bottles)
- Effective cleaning of the base device thanks to good accessibility, emptying of the upstream container without residues and complete stainless-steel design
- Easy, efficient cleaning of the filling system using prepared connection points and selectable self-cleaning program
- Bag placement on non-stick metal rods
- Design protected against spray water
- CE conformity
- Suitable for hot filling and for the filling of cold-pressed fruit and vegetable juices

Bottles and Bag-in-Box

Series filler R4 and R6 (bottles)

The voran® inline fillers in four or six-position design are the optimal solutions for small production filling.

Output: 300 or 500 litres per hour.

The well designed and purely mechanical mode of operation enables these fillers to achieve an excellent price-performance ratio. The R4 and R6 inline fillers are also available as table models. We offer bases for adjusting the work height to enable ergonomic operation.

The use of wide-neck adapters (optional) with diameters of 22 to 95 millimetres make it possible to fill bottles and jars with different neck diameters. The standard filler can be used for inside bottleneck diameters of 10 to 28 millimetres. The filler can be supplied with the option to control an upstream pasteurizer and it is possible to retrofit existing fillers with this option.

Cones are optionally available for seamless covering of different bottleneck diameters.

MBF750 (Bag-in-Box)

The MBF750 filling system offers a solution for the semi-automatic filling of bags in 3, 5, 10 and 20 litre sizes. voran®-Bag-in-Box filling system is equipped with two liter counting displays. These counters can be reset manually, independently of each other. This allows each of the filling processes to be counted even when different bag-in-box sizes are used.

The juice is transported by the pump of an upstream pasteuriser into the filler's juice storage tank. After a bag is inserted into the locking mechanism and the tap removed manually, the filling station is then positioned over the bag opening. The pre-set volume is gravity filled into the bag. The filling valve is controlled by the calibrate-able scale and closes when the filling volume is reached. This system achieves extremely accurate filling levels.

The filling system is equipped with an analogue thermometer for a quick visual temperature check.

R6

R4

Technical data

R4/R6

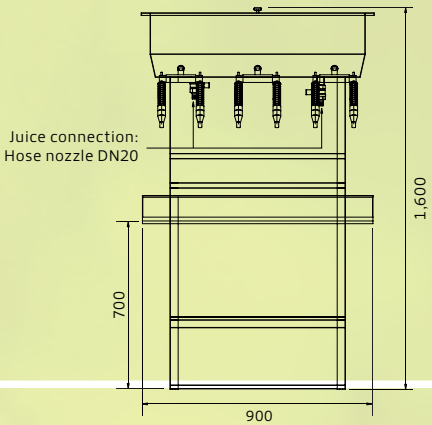

MBF750(-R6)

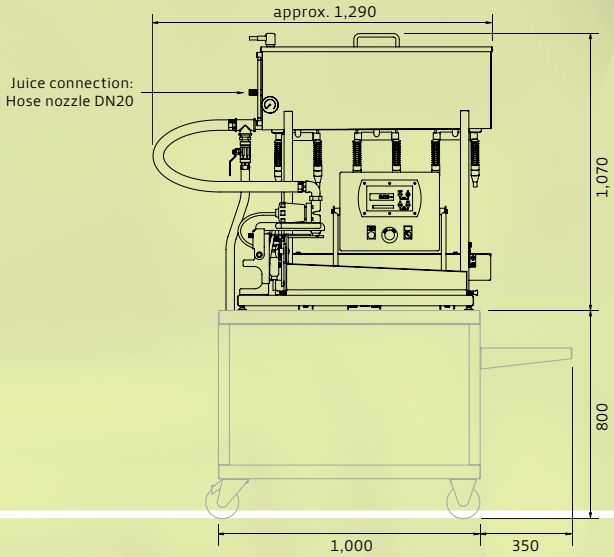

Model	R4	R6	MBF750(-R6)
*Rated output in l/h***	350	550	750 with 10 l-Bags
*Electrical connection***	–	–	230 V / 50 Hz
Connected load in kW	–	–	0.1 kW
Length/width/height dimensions in mm	500/600/1,600	500/900/1,600	1,290/750(870)/1,070
Weight in kg (dry)	36	44	85
Maximum filling temperature in °C	85	85	85
Repeat accuracy in %	±0.5	±0.5	±0.5
Juice reservoir volume in l	30	40	58
Protection type	–	–	IP54
Design	Stainless steel***	Stainless steel***	Stainless steel***
Compressed air consumption in l/min for 6 bar	–	–	100
Scope of supply	Cleaning unit, filling cones with 10 – 28 mm inside neck diameter		Cleaning unit, filling cones with 10 – 28 mm inside neck diameter

*Depending on the viscosity of the material ** Other mains voltages and designs on request ***Fulfils EC 1935/2004

Expressly subject to technical changes and errors.

voran.at

voran® business lines

- machines
- manufacturing
- meat solutions
- facades

How to find us

voran Maschinen GmbH
Production & Sales
Inn 7
A 4632 Pichl bei Wels
Austria | Europe

T +43 (0) 72 49 / 444-0
F +43 (0) 72 49 / 444-888
office@voran.at • www.voran.at

Service hotline
T +43 (0) 72 49 / 444-200

Folder ID 600000798